Pioneer

Service Manual

ORDER NO.
RRV2270

FILE-TYPE COMPACT DISC PLAYER

PD-F27

THIS MANUAL IS APPLICABLE TO THE FOLLOWING MODEL(S) AND TYPE(S).

Type	Model	Power Requirement	Remarks
	PD-F27		
KU/CA	◯	AC 120V	

● **This service manual should be used together with the following manual(s):**

Model No.	Order No.	Remarks
PD-F1009/KU/CA	RRV2262	

CONTENTS

1. CONTRAST OF MISCELLANEOUS PARTS 2
2. SCHEMATIC DIAGRAM 8
3. PCB CONNECTION DIAGRAM 14

PIONEER CORPORATION 4-1, Meguro 1-chome, Meguro-ku, Tokyo 153-8654, Japan
PIONEER ELECTRONICS SERVICE, INC. P.O. Box 1760, Long Beach, CA 90801-1760, U.S.A.
PIONEER EUROPE N.V. Haven 1087, Keetberglaan 1, 9120 Melsele, Belgium
PIONEER ELECTRONICS ASIACENTRE PTE. LTD. 253 Alexandra Road, #04-01, Singapore 159936

© PIONEER CORPORATION 2000

T–ZZR MAR. 2000 Printed in Japan

1. CONTRAST OF MISCELLANEOUS PARTS

NOTES :
- *Parts marked by " NSP " are generally unavailable because they are not in our Master Spare Parts List.*
- *The ⚠ mark found on some component parts indicates the importance of the safety factor of the part. Therefore, when replacing, be sure to use parts of identical designation.*
- *Reference Nos. indicate the pages and Nos. in the service manual for the base model.*
- *When ordering resistors, first convert resistance values into code form as shown in the following examples.*

Ex. 1 *When there are 2 effective digits (any digit apart from 0), such as 560 ohm and 47k ohm (tolerance is shown by J = 5%, and K = 10%).*

560 Ω → 56 × 10¹ → 561 ..... RD1/4PU 5 6 1 J
47k Ω → 47 × 10³ → 473 ..... RD1/4PU 4 7 3 J
0.5 Ω → R50 ..... RN2H R 5 0 K
1 Ω → 1R0 ..... RS1P 1 R 0 K

Ex. 2 *When there are 3 effective digits (such as in high precision metal film resistors).*

5.62k Ω → 562 × 10¹ → 5621 ..... RN1/4PC 5 6 2 1 F

■ CONTRAST TABLE

PD-F27/KU/CA and PD-F1009/KU/CA are constructed the same except for the following:

Ref. No.	Mark	Symbol and Description	Part No.		Remarks
			PD-F1009 /KU/CA	PD-F27 /KU/CA	
		PCB ASSEMBLIES			
⚠	NSP	MOTHER BOARD ASSY	PWM2294	PWM2260	
P7- 1		├─ MAIN BOARD ASSY	PWZ4036	PWZ3833	
		├─ KEY BOARD ASSY	Not used	PWZ3838	No.1
		├─ SR BOARD ASSY	PWZ4042	Not used	
P7- 2		├─ POWER BOARD ASSY	PWZ4048	Not used	
P7-27	NSP	├─ DOOR MOTOR BOARD ASSY	PWZ4061	Not used	
P7-28	NSP	├─ DOOR SW BOARD ASSY	PWZ4062	Not used	
P9- 7	NSP	├─ VOLUME BOARD ASSY	PWZ4063	Not used	
P13-1		├─ DISPLAY BOARD ASSY	PWZ4053	Not used	
P13-2		└─ CONTROL BOARD ASSY	PWZ4057	Not used	
⚠	NSP	SUB BOARD ASSY	Not used	PWX1586	
P7- 2	⚠	├─ POWER BOARD ASSY	Not used	PWZ3858	
P7-27	NSP	├─ DOOR MOTOR BOARD ASSY	Not used	PWZ3863	
P7-28	NSP	├─ DOOR SW BOARD ASSY	Not used	PWZ3865	
P9- 7	NSP	├─ VOLUME BOARD ASSY	Not used	PWZ3864	
P13-1		├─ DISPLAY BOARD ASSY	Not used	PWZ3844	
P13-2		├─ CONTROL BOARD ASSY	Not used	PWZ3849	
	NSP	├─ HEADPHONE BOARD ASSY	Not used	PWZ3861	No.2
	NSP	└─ LED BOARD ASSY	Not used	PWZ3867	No.3
		PACKING			
P5- 3		Packing Case	PHG2397	PHG2413	
P5- 6		Operating Instructions(English)	PRB1300	PRB1304	
P5- 7		Remote Control Unit	PWW1168	PWW1139	
P5-12	NSP	Warranty Card	ARY7045	ARY1026	
	NSP	Side Panel Sheet	Not used	AMR7284	No.4
		EXTERIOR			
P7- 9		Rear Base	PNA2529	PNA2546	
P7-15		CR Spacer	PNW2961	Not used	
P7-17		Hood	PNW2793	PNW2872	
		Insulator	AMR7198	PNW2766	No.5
		CR Lens	Not used	PNW2816	No.6

Ref. No.	Mark	Symbol and Description	Part No.		Remarks
			PD-F1009 /KU/CA	PD-F27 /KU/CA	
		FRONT PANEL SECTION			
P13- 4		26P F. F.C / 60V	ADD7118	Not used	
P13- 4		18P. F.F.C / 60V	Not used	PDD1188	
P13- 5		MODE Button	PAC1994	PAC1880	
P13- 6		PLAY Button	PAC1995	PAC1881	
P13- 9		Name Plate	PAM1776	PAN1376	
P13-10		Display Window	PAM1816	PAM1782	
P13-16		Operation Panel	PNW2958	PNW2970	
P13-21		16P. F.F.C / 60V	PDD1203	Not used	
P13-24		Rubber Sheet	AEB1111	Not used	
		Rotary Knob	Not used	RAC1903	No.7

- The numbers in the remarks column correspond to the numbers on the "EXPLODED VIEWS".
- For PCB ASSEMBLES, Refer to "CONTRAST OF PCB ASSEMBLIES","PCB PARTS LIST", "2.SCHEMATIC DIAGRAM" and "3. PCB CONNECTION DIAGRAM".

■ EXPLODED VIEWS

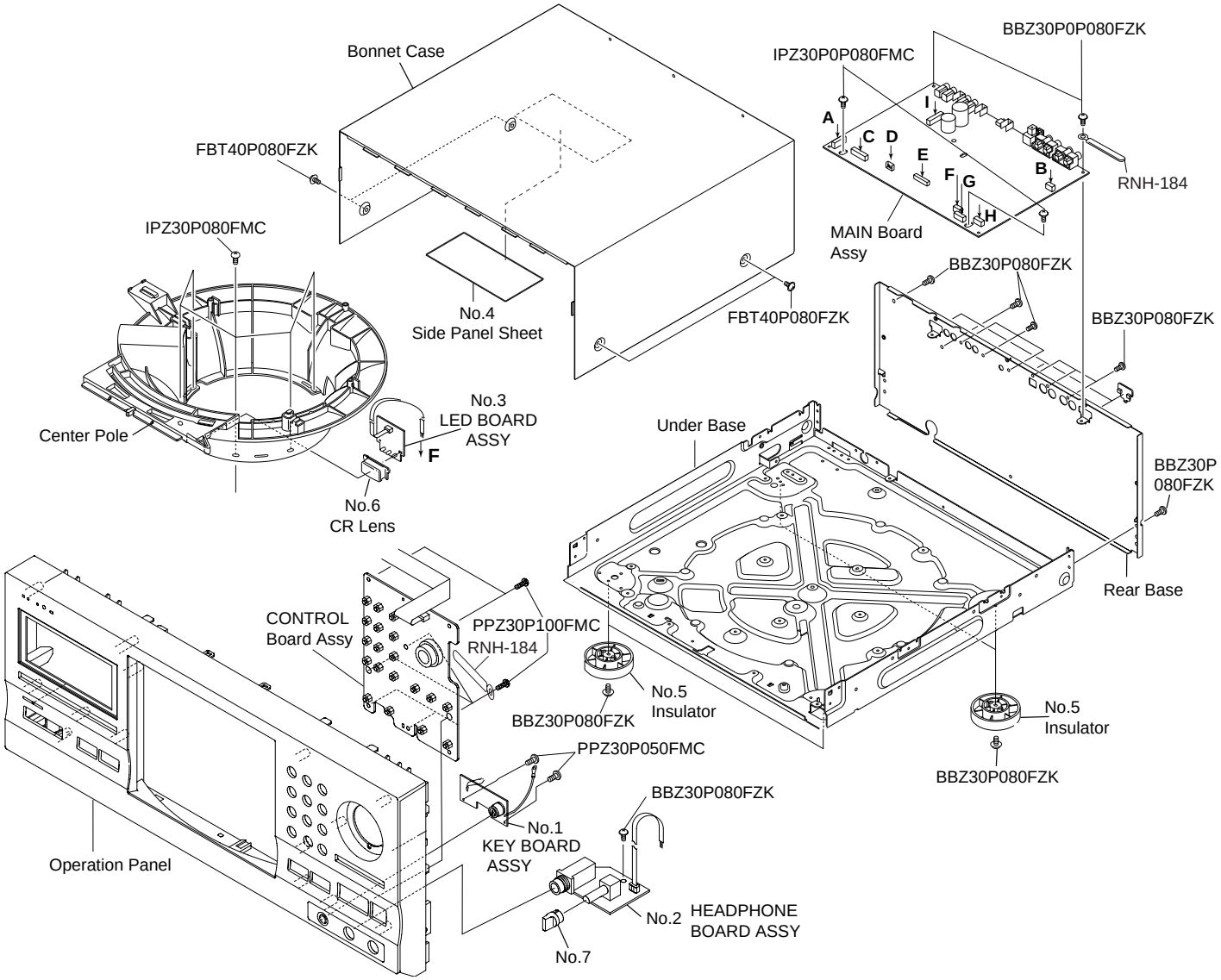

■ CONTRAST OF PCB ASSEMBLIES

KF DISPLAY BOARD ASSY

PWZ3844 and PWZ4053 are constructed the same except for the following:

Mark	Symbol and Description	Part No.		Remarks
		PWZ4053	PWZ3844	
	IC701	PE5132B	PE5134A	
	IC721	S-806E	Not used	
	Q702- Q705	Not used	DTC124ES	
	D706, D707	1SS133	Not used	
	C703	CKSQYF103Z50	CKCYF103Z50	
	C704, C705	CKSQYF103Z50	CKPUYF103Z25	
	C706	Not used	CEAL100M50	
	C707	CKSQYF103Z50	CKPUYF104Z50	
	C708	Not used	CKPUYF104Z50	
	C710, C711	Not used	CEAT100M50	
	C721	CEAL101M6R3	Not used	
	C722	CKSQYF104Z25	Not used	
	R701	RS1/10S471J	RD1/4PU471J	
	R702- R704	RS1/10S471J	RD1/4PU124J	
	R705	Not used	RD1/4PU124J	
	R706, R707	RS1/10S473J	RD1/4PU103J	
	R710	RS1/10S0R0J	Not used	
	R711	RS1/10S562J	Not used	
	R712- R718, R721	RS1/10S473J	Not used	
	R751	RS1/10S471J	RD1/4PU331J	
	R1701	RS1/10S103J	Not used	
	R1702- R1706	RS1/10S103J	RD1/4PU103J	
	R1707	Not used	RD1/4PU103J	
	CN701	HLEM26R-1	HLEM18R-1	
	CN702	HLEM16S-1	SBRK04R-4	
	J702	Not used	DE010WE0	
	KN701	Not used	PNB1595	
	V701	PEL1098	PEL1096	
	FL HOLDER	VNF1085	Not used	
	CABLE HOLDER	Not used	51048-1300	
	CABLE HOLDER	Not used	51048-1400	

• Refer to "2. SCHEMATIC DIAGRAM".

MF POWER BOARD ASSY

PWZ3858 and PWZ4048 are constructed the same except for the following:

Mark	Symbol and Description	Part No.		Remarks
		PWZ4048	PWZ3858	
⚠	IC61	Not used	NJM78M56FA	
⚠	IC71	Not used	BA05T	
⚠	Q62	2SC1815	Not used	
⚠	D71 , D72	Not used	S5688G	
⚠	D11- D14, D52	S5688G	Not used	
	D54	MTZJ18B	Not used	
	D62	MTZJ6.2B	Not used	
	D81	1SS133	Not used	
	D82	MTZJ4.7B	Not used	
	C11, C13, C62, C63	CKCYF103Z50	CQMA103J50	

Mark	Symbol and Description	Part No.		Remarks
		PWZ4048	PWZ3858	
	C15– C17	CKCYF103Z50	CFTLA103J	
	C61	Not used	CQMA103J50	
	C51, C52	CEAT101M35	Not used	
	C65	CEAT4R7M50	CEAT101M10	
	C66	CKSQYF104Z25	Not used	
	C71	Not used	CEAT332M16	
	C72	Not used	CEHAT101M10	
	C74	CCSQCH101J50	CCCSL101J50	
	C1061	CKSQYF103Z50	Not used	
	R51	RS1/10S223J	Not used	
	R52- R54	RD1/4PU152J	Not used	
	R64	RD1/4PU222J	Not used	
	R71	Not used	RD1/4PU103J	
	R81	RD1/4PU472J	Not used	
	R82	RD1/4PU103J	Not used	
⚠	T1	PTT1318	PTT1348	
	J11	D20PDY1025E	D20PDY0925E	
	J71	Not used	D20PDY0315E	
	3P CABLE HOLDER	Not used	51048-0300	
	CABLE HOLDER	51048-1000	51048-0900	
	PCB BINDER	VEF1040	Not used	

• Refer to "2. SCHEMATIC DIAGRAM".

L CONTROL BOARD ASSY

PWZ3849 and PWZ4057 are constructed the same except for the following:

Mark	Symbol and Description	Part No.		Remarks
		PWZ4057	PWZ3849	
	C751, C752	CKSQYF103Z50	CKPUYF103Z25	

B DOOR MOTOR BOARD ASSY

PWZ3863 and PWZ4061 are constructed the same except for the following:

Mark	Symbol and Description	Part No.		Remarks
		PWZ4061	PWZ3863	
	J631	D20PDY0445E	D20PDY0445G	

D DOOR SW BOARD ASSY

Although PWZ3865 and PWZ4062 are different in part number, they consist of the same components.

O VOLUME BOARD ASSY

Although PWZ3864 and PWZ4063 are different in part number, they consist of the same components.

Mark	No.	Description	Part No.

■ PCB PARTS LIST

Q KEY BOARD ASSY (PWZ3838)

SEMICONDUCTORS

	D801, D802		DA204K

CAPACITORS

	C805		CEAL101M6R3
	C802– C804, C806		CKSQYB104K25

RESISTORS

	R801, R802		RS1/10S471J
	R803, R1803		RS1/10S0R0J

OTHERS

	J801	4P JUMPER WIRE	D20PWY0455E
NSP	J802	LEAD WIRE UNIT	PDF1012
	JA801	MIN DIN 6P SOCKET	RKN1038

R HEADRHONE BOARD ASSY(PWZ3861)

COILS

	L501, L504, L505		LAU1R0J

CAPACITORS

	C505		CCCSL101J50
	C503		CGCYX473K25
	C501, C502		CKCYF103Z50

RESISTORS

	VR501 (500Ω- B)		PCS1003

OTHERS

		3P CABLE HOLDER	51048-0300
	J501	3P JUMPER WIRE	D20PDY0355E
	JA501	HP JACK	RKN1002

S LED BOARD ASSY(PWZ3867)

SEMICONDUCTORS

	D1601– D1603		SLR-343YC

RESISTORS

	R1601– R1603		RD1/4PU331J

OTHERS

		3P CABLE HOLDER	51048-0300
	J1601	3P JUMPER WIRE	D20PDY0325E

Mark	No.	Description	Part No.

J F MAIN BOARD ASSY (PWZ3833)

SEMICONDUCTORS

	IC151		CXA2570N
	IC301		CXD2587Q
⚠	IC35, IC36		ICP-N10
⚠	IC203		LA6517
⚠	IC201, IC202		LA6520
	IC501		M5218AFP
	IC352		M5M51008CFP-70H
	IC431– IC433		NJM4558MD
⚠	IC23		NJM79M05FA
	IC341		PD0236AM
	IC351		PDE5133A
	IC401		PE8001A
⚠	IC21		PQ05RR12
	IC353		S-806E
	IC951		TC74HC157AF
	IC331		TC74HCU04AF
	Q151		2SA854S
	Q391		2SC1740S
	Q361, Q381		2SC2412K
	Q431– Q436		2SD2144S
	Q152, Q362, Q438, Q441, Q443		DTA124EK
	Q382		DTA124EK
	Q437, Q440, Q442, Q439		DTC124EK
	D351- D353, D391, D392		1SS133
	D395, D958		1SS133
	D151, D406– D408, D410		DA204K
	D54		MTZJ24B
⚠	D11– D14, D52		S5688G
	D152		RB501V-40
	D218		UDZS6.2B

COILS AND FILTERS

	L351, L332		LAU100J
	L334		PTL1003

CAPACITORS

	C323, C361, C407, C408		CCSQCH101J50
	C301, C310		CCSQCH221J50
	C403		CCSQCH240J50
	C404		CCSQCH300J50
	C335		CCSQCH390J50
	C302		CCSQCH681J50
	C29, C365		CEAT101M10
	C51		CEAT101M35
	C52		CEAT101M50
	C201– C204,C333		CEAT470M16
	C309		CEATR47M50
	C1511, C1512, C364		CFTLA104J50
	C231, C233, C406		CKSQYB102K50
	C151, C215, C220, C225, C240		CKSQYB103K50
	C250, C308		CKSQYB103K50
	C230, C260, C303, C334, C338		CKSQYB104K25
	C159, C241, C243, C306		CKSQYB152K50
	C218		CKSQYB332K50
	C2112		CGCYX473K25

Mark	No.	Description	Part No.
	C232, C234		CKSQYB471K50
	C307		CKSQYB473K25
	C242, C244		CKSQYB681K50
	C212, C214		CKSQYB682K50
	C305		CKSQYB822K50
	C158, C322, C339, C342, C343		CKSQYF103Z50
	C352, C353, C362, C410		CKSQYF103Z50
	C412, C413, C416– C418, C953		CKSQYF103Z50
	C28, C154, C205, C206		CKSQYF104Z25
	C314, C316, C318, C320, C321		CKSQYF104Z25
	C332, C337, C1324, C1325		CKSQYF104Z25
	C359, C1358, C1398, C1951, C1952		CKSQYF473Z50
	C445, C446		CQMBA102J50
	C433– C436, C439, C440		CQMBA152J50
	C447, C448		CQMBA471J50
	C431, C432, C441- C444(47µF/50V)		PCH1124
	C155- C157, C304, C411(100µF/50V)		PCH1126
	C419(100µF/50V)		PCH1126
	C414, C415(4.7µF/50V)		PCH1127
	C27, C153, C315, C317(220µF/25V)		PCH1128
	C319, C331, C341, C351(220µF/25V)		PCH1128
	C354	(0.1F/5.5V)	PCH1133
	C25, C26	(4700µF/16V)	PCH1135

RESISTORS

	R56– R59		RD1/4PU241J
	R52– R54		RD1/4PU272J
	R471– R476		RD1/4PU332J
	R163, R164, R503, R504		RD1/4PU470J
	R210, R441, R442, R445, R446		RN1/10SE1002D
	R216, R218		RN1/10SE1003D
	R437, R438		RN1/10SE1801D
	R457– R460		RN1/10SE2202D
	R217		RN1/10SE3602D
	R219, R451– R456		RN1/10SE4702D
	VR155	(10kΩ)	VCP1156
	Other Resistors		RS1/10S □□□ J

OTHERS

	CN207	MT 4P CONNECTOR	173981-4
	CN12,CN208	3P JUMPER CONNECTOR	52147-0310
	CN501	3P JUMPER CONNECTOR	52147-0310
	CN205	4P JUMPER CONNECTOR	52147-0410
	CN203	5P JUMPER CONNECTOR	52147-0510
	CN11,CN204	9P JUMPER CONNECTOR	52147-0910
	JA331	OPTICAL LINK OUT	GP1F32T
	CN351	CONNECTOR	HLEM18S-1
	JA401, JA402	JACK	PKB1035
	JA393	JACK	PKN1005
	KN151	JUMPER TERMINAL	PKX1001
	X401	XTAL. RES. (16.9344MHz)	PSS1008
	J391,J392	REMOTE JACK	RKN1004
	J951,J952	REMOTE JACK	RKN1004
	CN201	6P TOP POST	B6P-SHF-1AA
	CN202	CONNECTOR	SLW16S-1C7
	X351	CERAMIC RESONATOR (4.19MHz)	VSS1028

Mark	No.	Description	Part No.
	J332	1P JACK	VKB1097
		PCB BINDER	VEF1040
		SCREW PLATE	VNE1948

2. SCHEMATIC DIAGRAM

2.1 MAIN BOARD ASSY (1/2)

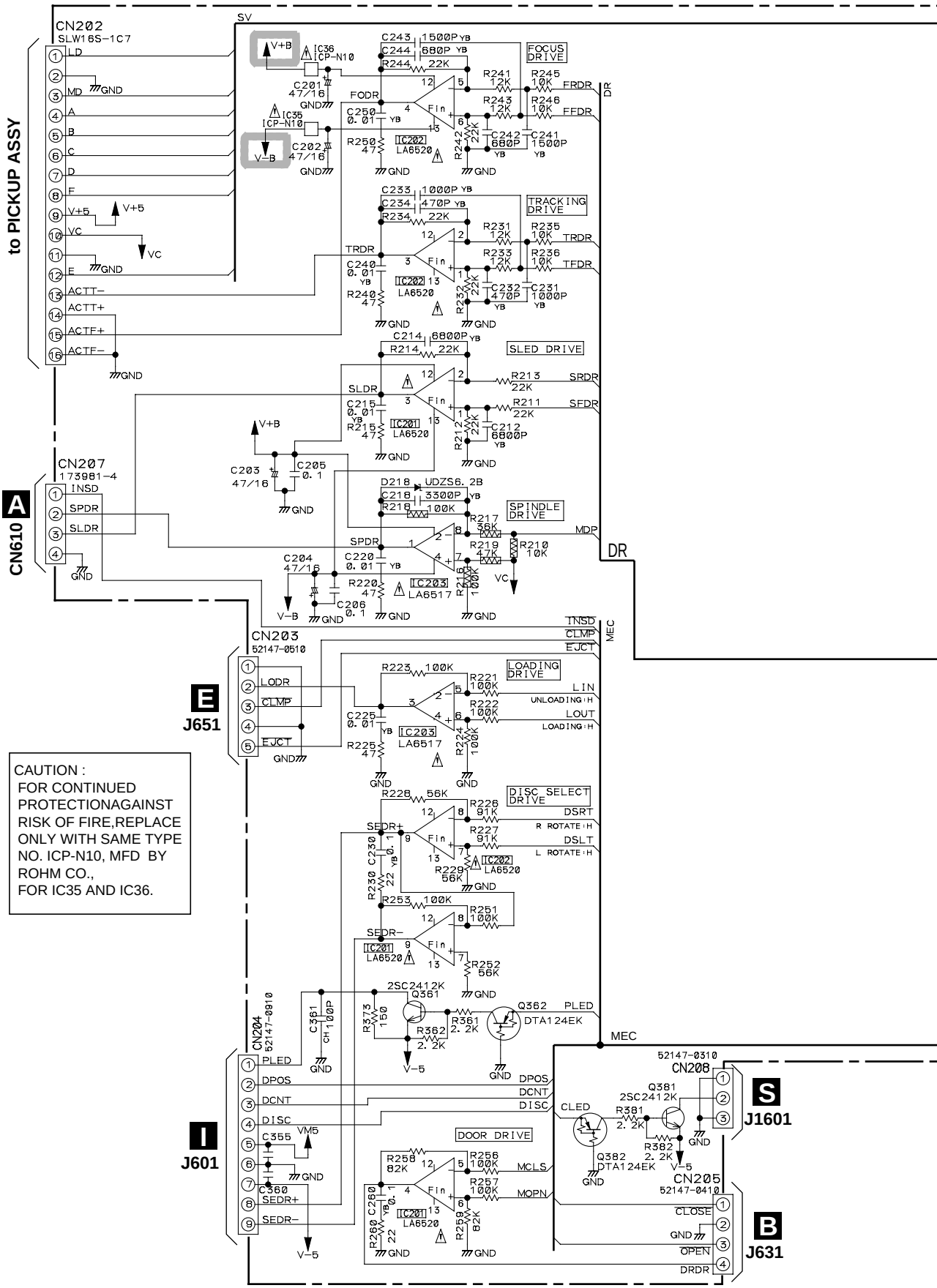

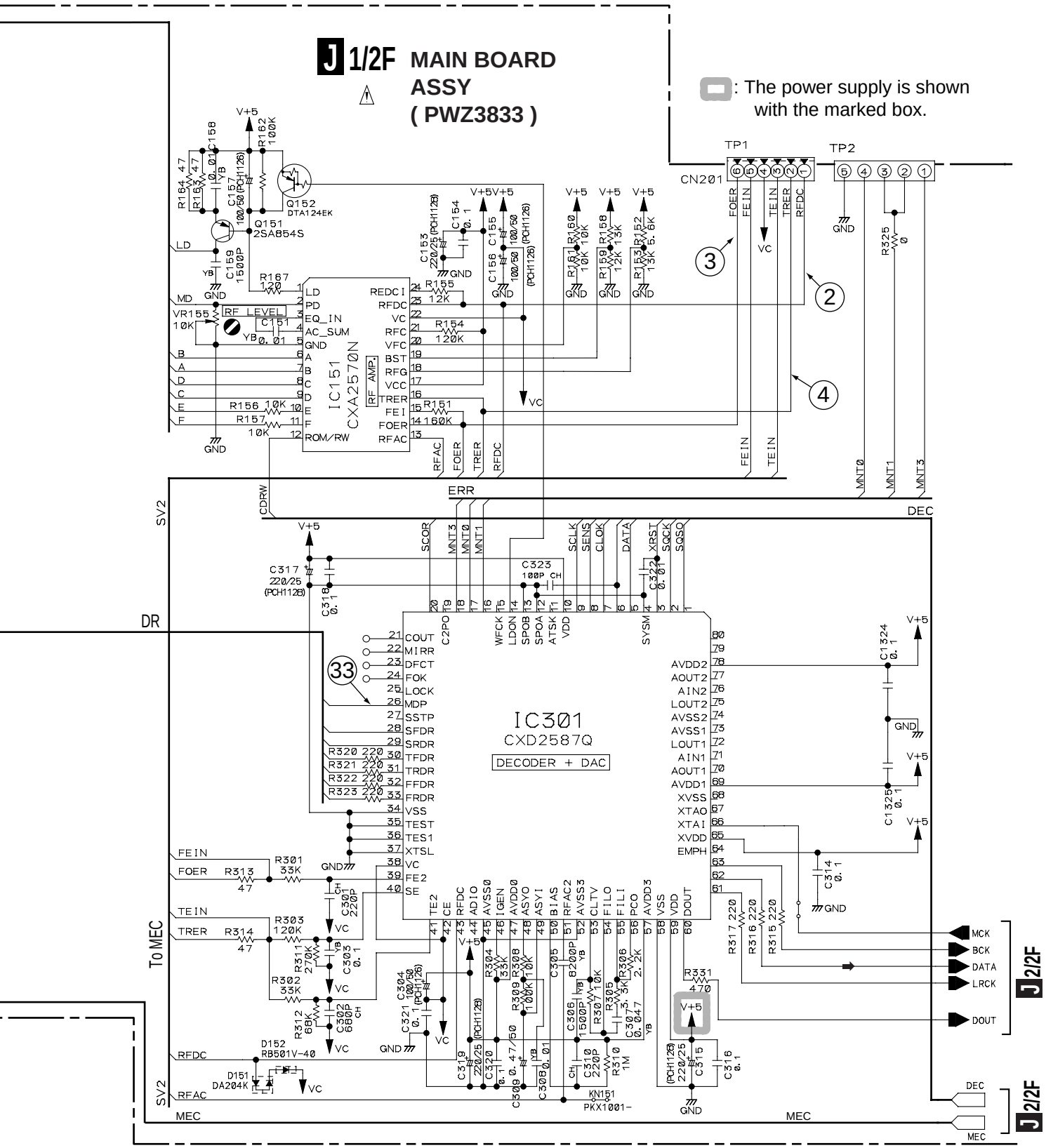
J 1/2F MAIN BOARD ASSY (PWZ3833)
: The power supply is shown with the marked box.
IC151 CXA2570N
IC301 CXD2587Q
DECODER + DAC
CN201
TP1
TP2
Q152 DTA124EK
Q151 2SA854S
D152 RB501V-40
D151 DA204K
KN151 PKX1001-
To MEC
J 2/2F

2.2 MAIN BOARD ASSY (2/2)

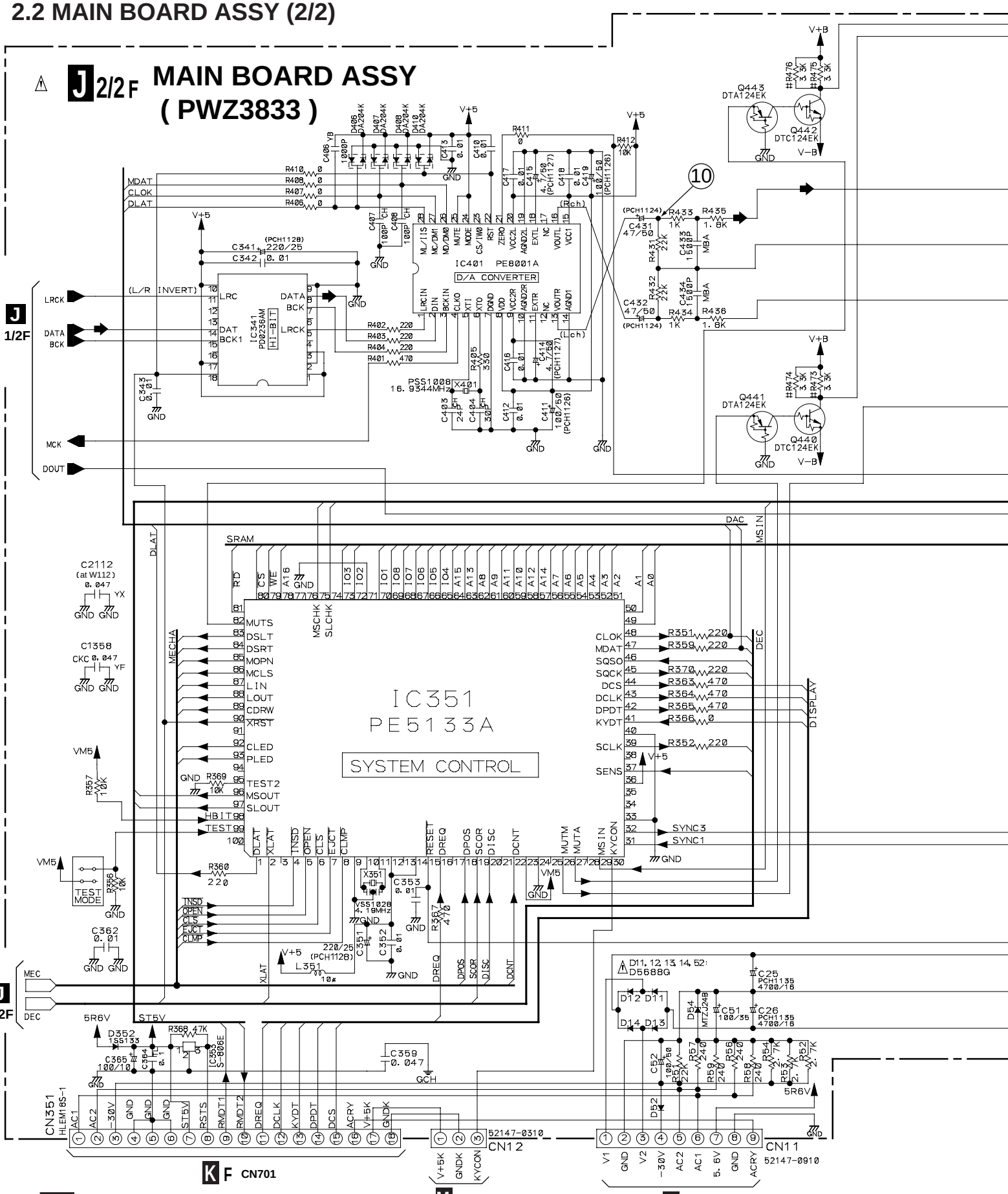

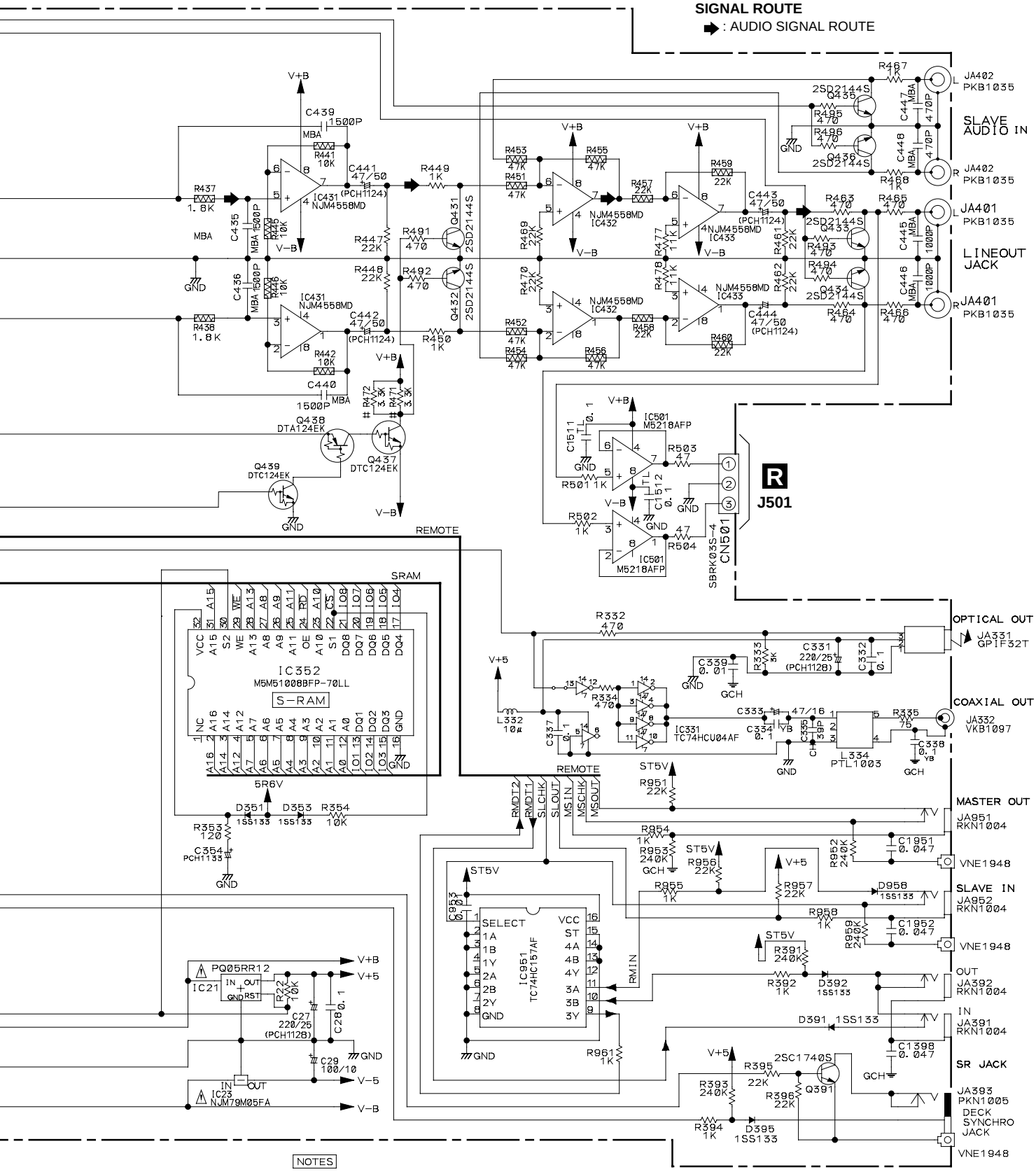

NOTES

CAPACITORS
UNMARKED UNIT: μF

YB CERAMIC	CKSQYB
CH CERAMIC	CCSQCH
YF CERAMIC	CKCYF
SL CERAMIC	CCCSL
UNMARKED CERAMIC	CKSQYF
TL FILM	CFTLA
MBA FILM	CQMBA
UNMARKED ELECTOROLYSIS	CEAT

INDUCTORS
UNIT: μH

AXIAL TYPE	LAU

RESISTORS
UNIT: Ω

UNMARKED	RS1/10S
#	RD1/4PU
	RN1/10SE

2.3 DISPLAY BOARD, POWER BOARD, KEY BOARD, HEADPHONE BOARD and LED BOARD ASSYS

DISPLAY BOARD ASSY
S701 : MODE
S702 : CLEAR
S703 : PROGRAM
S704 : RANDOM
S705 : TIME/CHARA
S706 : STANDBY/ON
S707 : SINGLE LOADER ACCESS
S708 : SINGLE LOADER PLAY

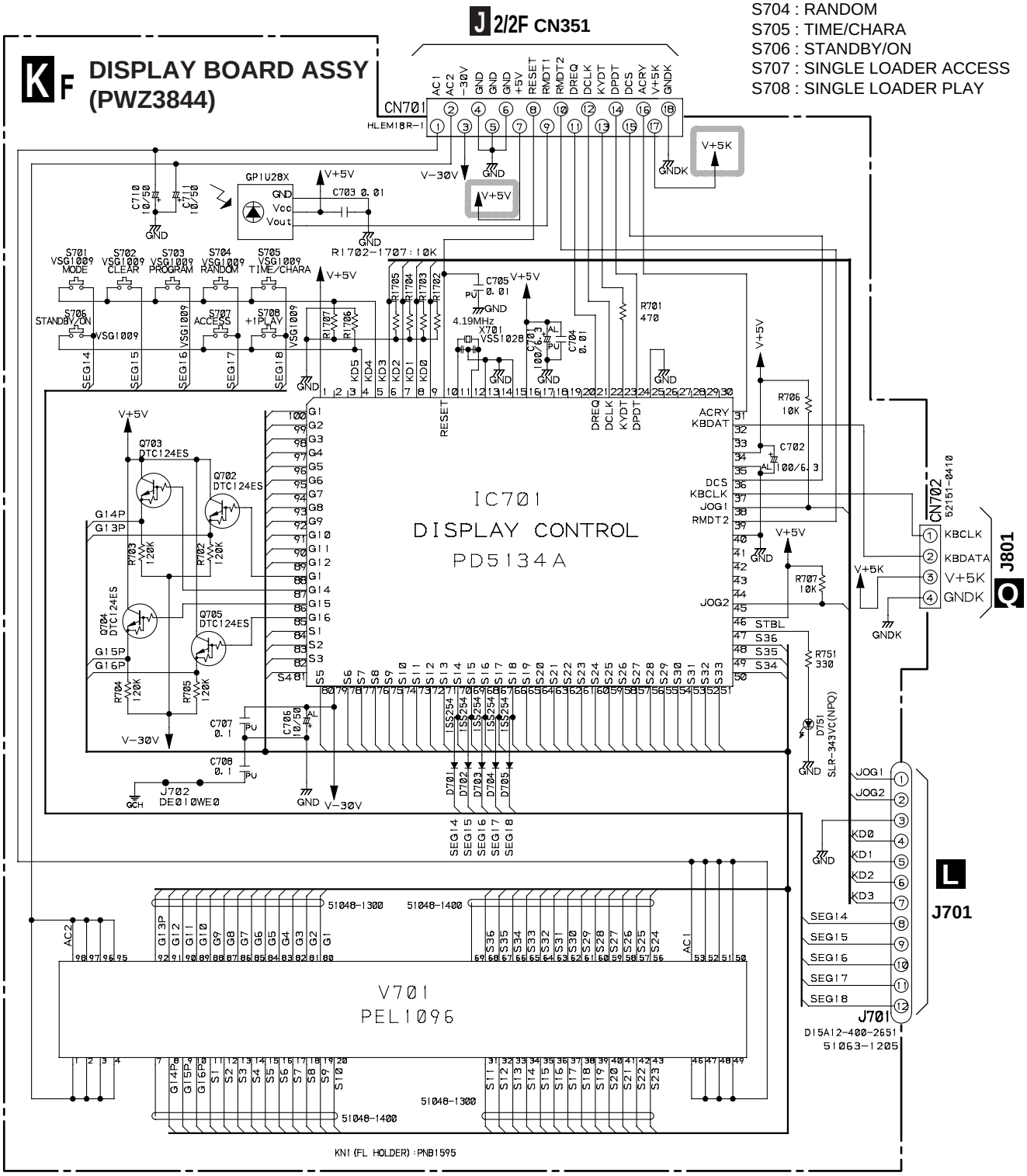

: The power supply is shown with the marked box.

M F POWER BOARD ASSY (PWZ3858)

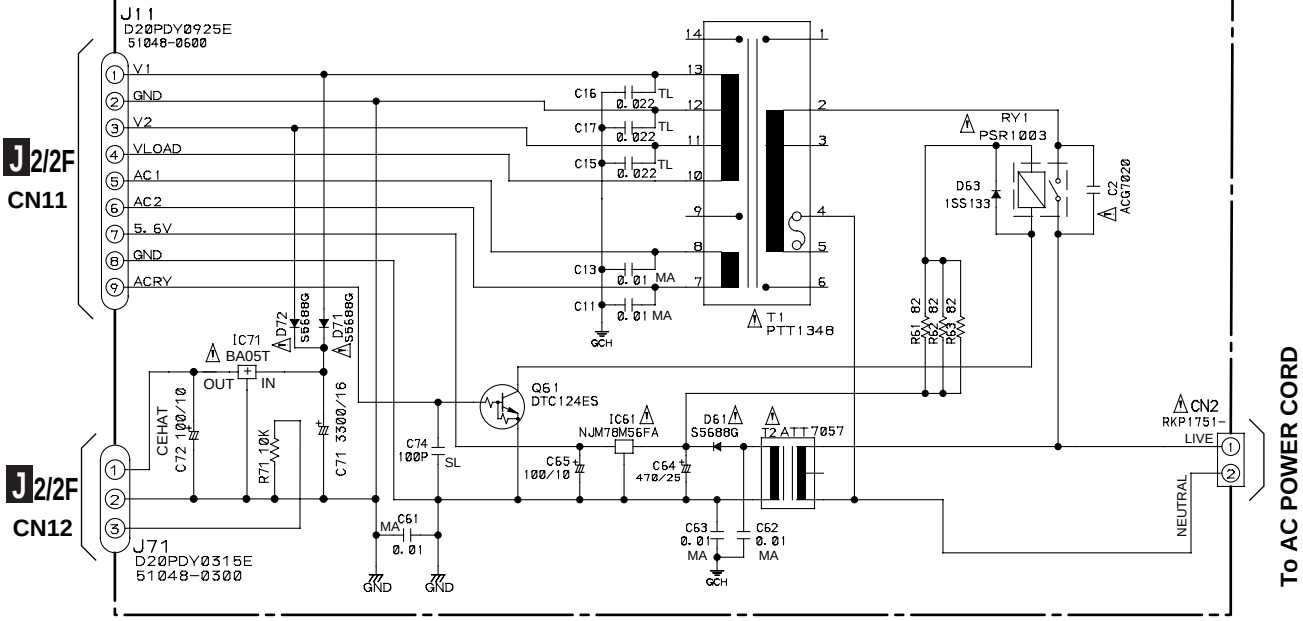

Q KEY BOARD ASSY (PWZ3838)

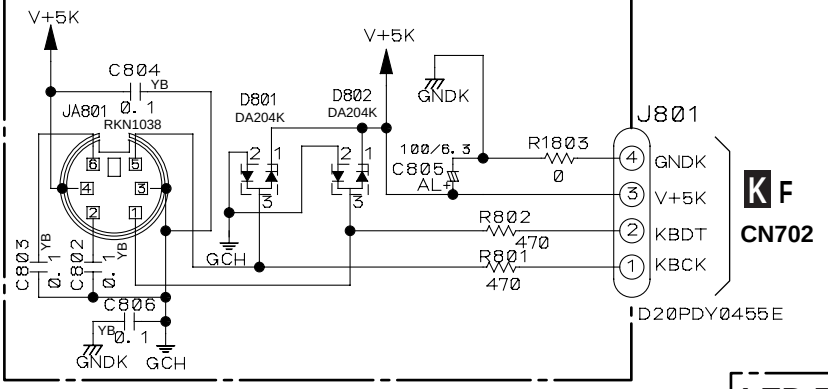

R HEADPHONE BOARD ASSY (PWZ3861)

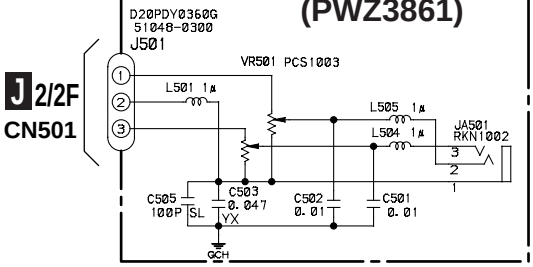

LED BOARD ASSY (PWZ3867) S

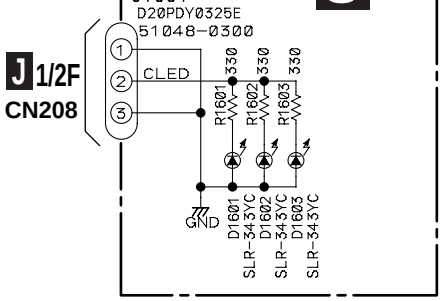

3. PCB CONNECTION DIAGRAM

3.1 MAIN BOARD and HEADHONE BOARD ASSYS

JF MAIN BOARD ASSY

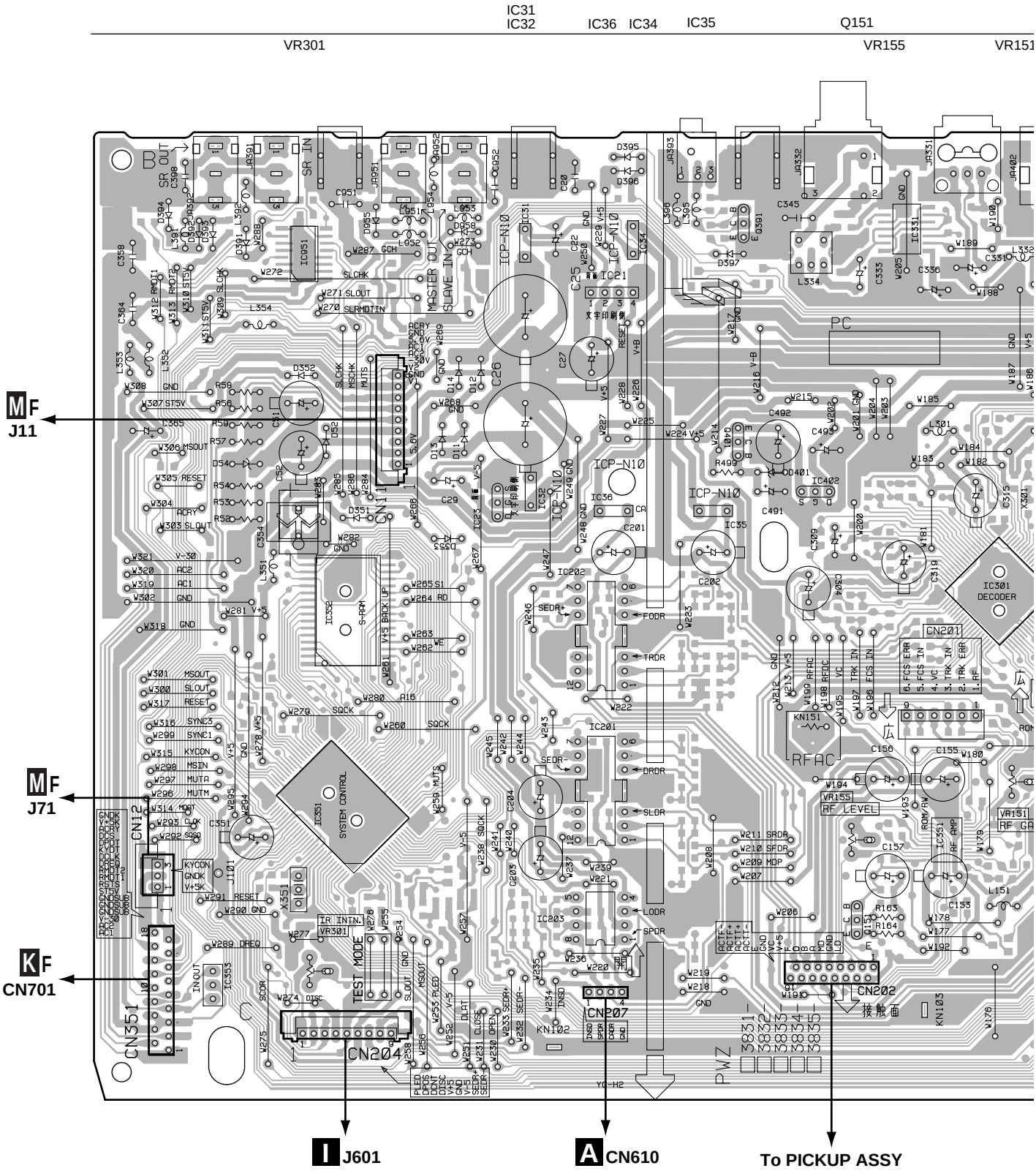

NOTE FOR PCB DIAGRAMS:

1. Part numbers in PCB diagrams match those in the schematic diagrams.
2. A comparison between the main parts of PCB and schematic diagrams is shown below.

Symbol in PCB Diagrams	Symbol in Schematic Diagrams	Part Name
B C E	B C E B C E	Transistor
B C E	B C E B C E	Transistor with resistor
D G S	D G S D G S	Field effect transistor
		Resistor array
		3-terminal regulator

3. The parts mounted on this PCB include all necessary parts for several destination.
   For further information for respective destinations, be sure to check with the schematic diagram.
4. Viewpoint of PCB diagrams

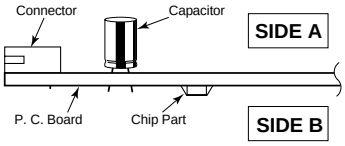

R HEADPHONE BOARD ASSY

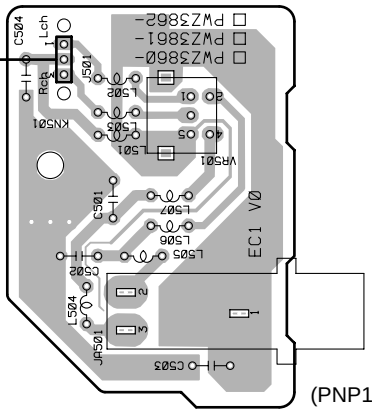

(PNP1451-F)

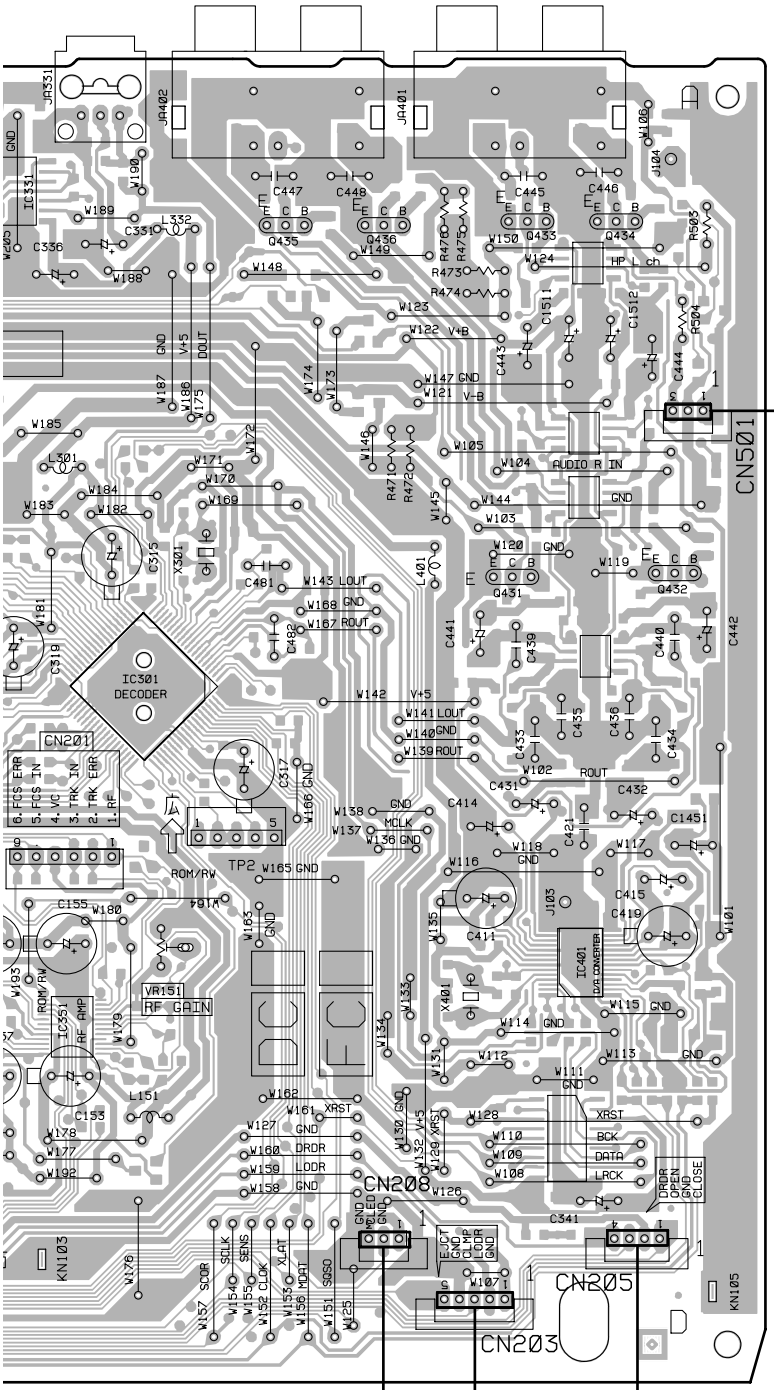

(PNP1468-B)

SIDE A

JF MAIN BOARD ASSY

		IC501						
		IC433						
Q470		IC432						
Q471		IC431		Q436				
Q432		IC401	Q433	Q438	Q435	IC301		
Q439	Q434	IC341	Q431	Q437	Q440 Q442	Q152	IC151	IC

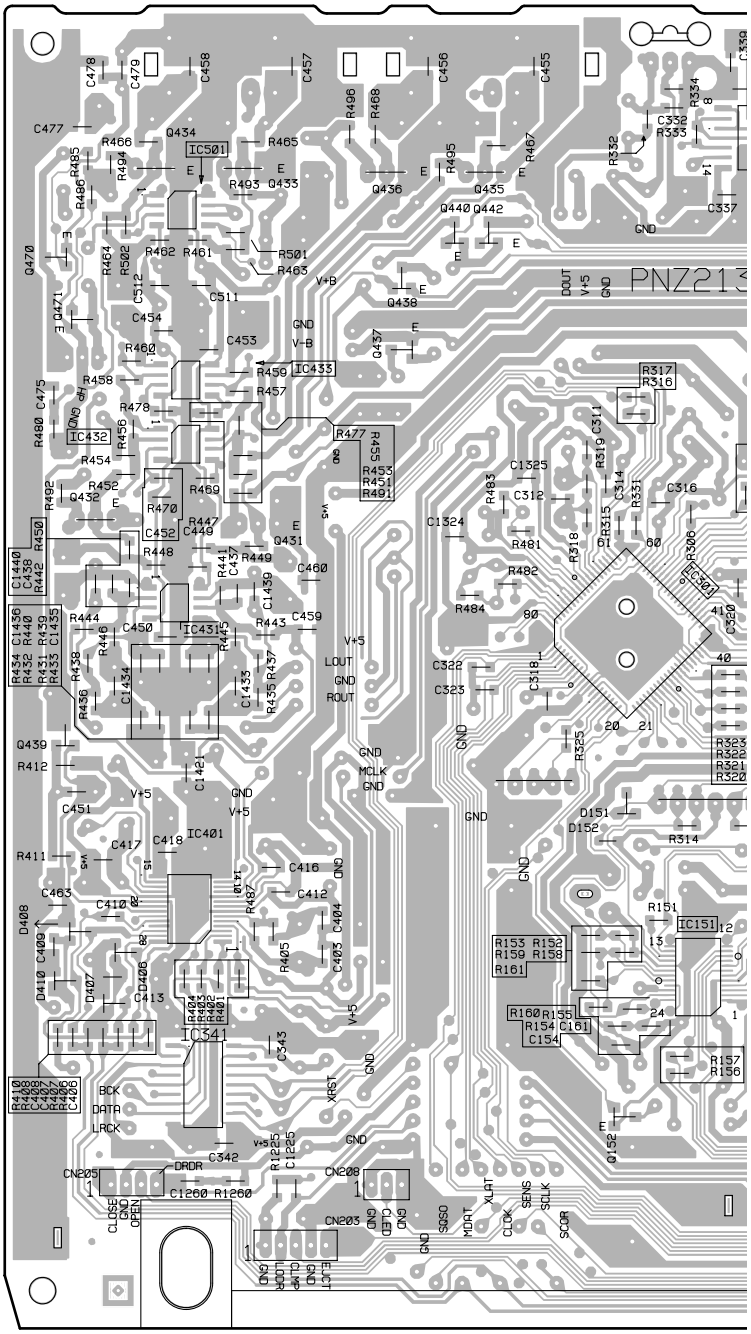

R HEADPHONE BOARD ASSY

SIDE B

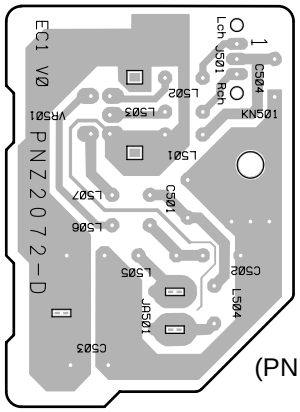

(PNP1451-F)

(PNP1468-B)

A

SIDE B

IC301
Q152 IC151 IC331 IC402 Q441
Q401 Q433 IC21
IC202
IC201
IC203 IC23 Q382 Q381 Q362
Q361 IC352
IC351 IC951 IC353

B

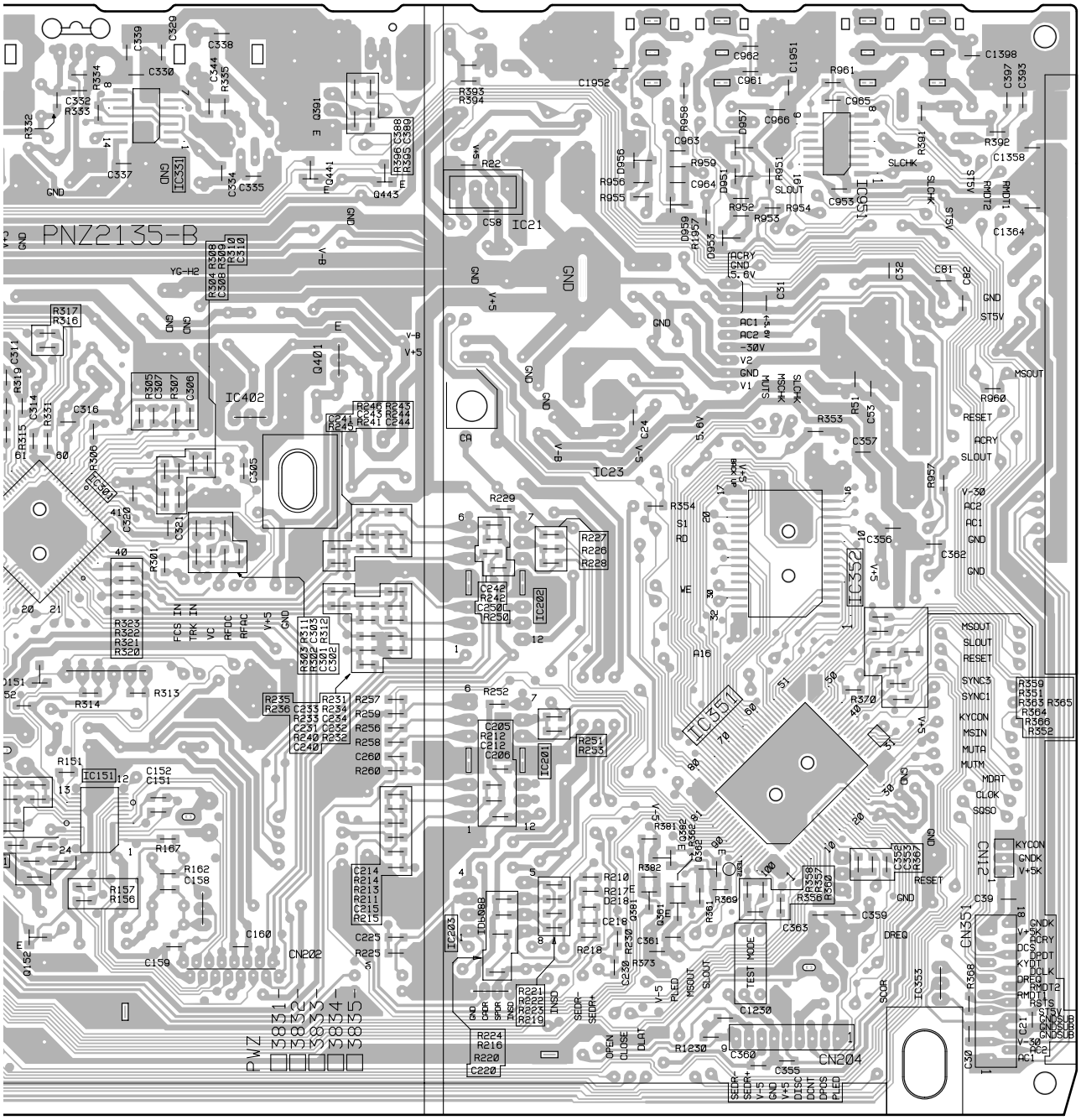

C

D

3.2 DISPLAY BOARD and POWER BOARD ASSYS

SIDE A

KF DISPLAY BOARD ASSY

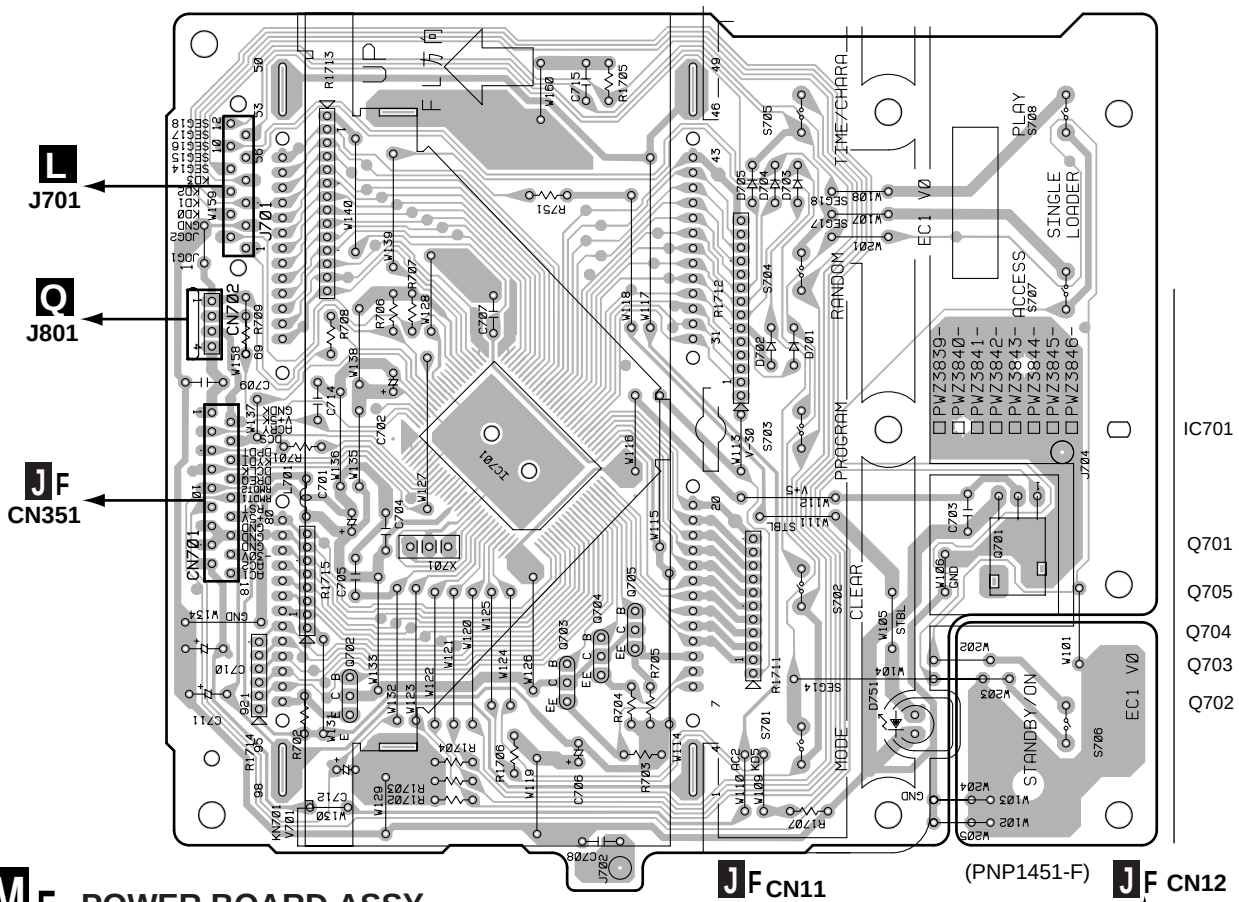

MF POWER BOARD ASSY

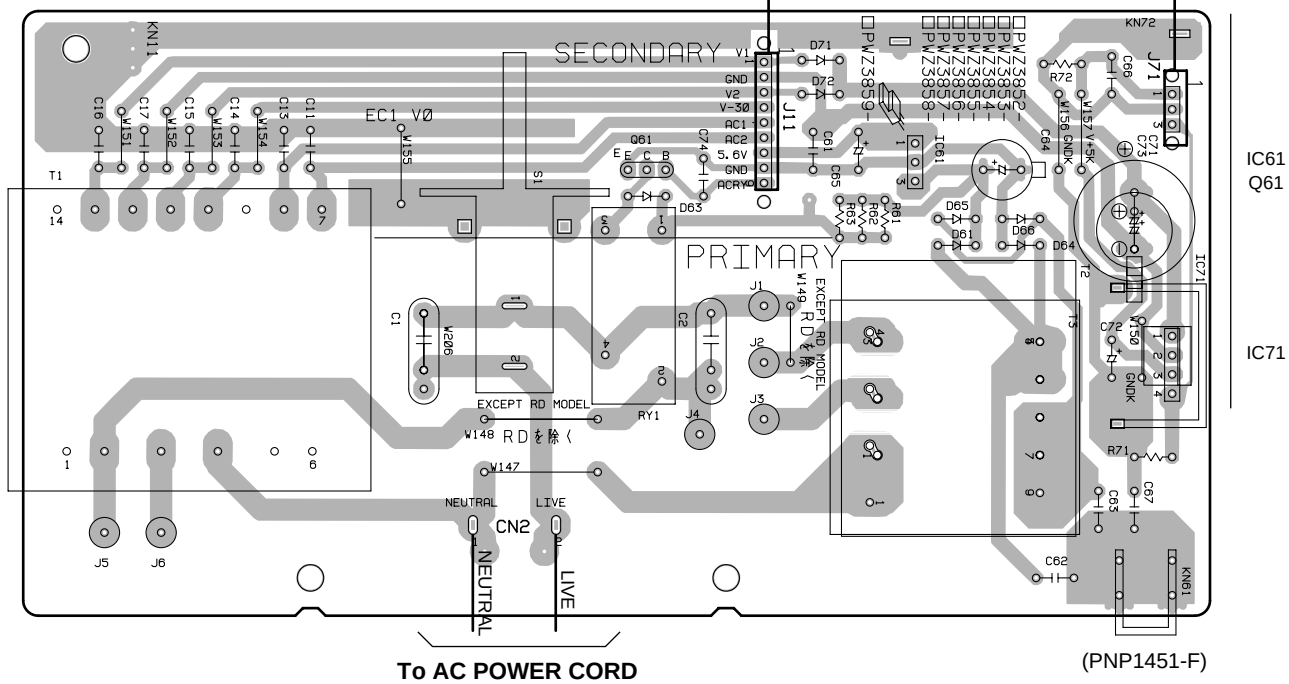

3.3 KEY BOARD and LED BOARD ASSYS

SIDE A

Q KEY BOARD ASSY

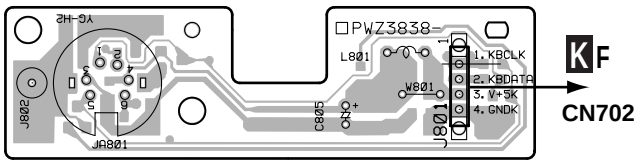

(PNP1468-B)

S LED BOARD ASSY

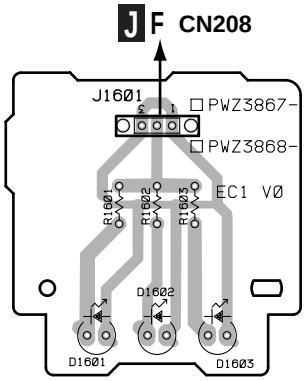

(PNP1451-F)

Q KEY BOARD ASSY

SIDE B

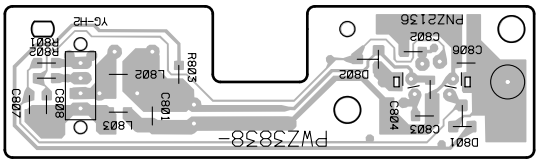

(PNP1468-B)

S LED BOARD ASSY

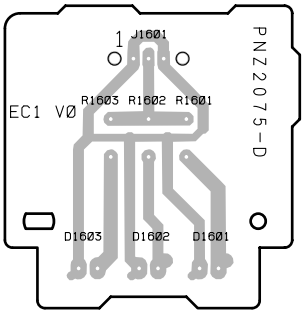

(PNP1451-F)

Service Manual

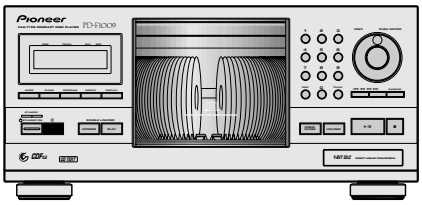

ORDER NO.
RRV2262

FILE-TYPE COMPACT DISC PLAYER

PD-F1009

THIS MANUAL IS APPLICABLE TO THE FOLLOWING MODEL(S) AND TYPE(S).

Type	Model	Power Requirement	Remarks
	PD-F1009		
KU/CA	○	AC120V	
MY	○	AC220-230V	

CONTENTS

1. SAFETY INFORMATION 2
2. EXPLODED VIEWS AND PARTS LIST 4
3. BLOCK DIAGRM AND SCHEMATIC DIAGRAM ... 14
4. PCB CONNECTION DIAGRAM 22
5. PCB PARTS LIST 38
6. ADJUSTMENT 44
7. GENERAL INFORMATION 48
7.1 DIAGNOSIS 48
7.1.1 DISASSEMBL 48
7.1.2 ERROR CHECK DISPLAY 51
7.1.3 EXPLANATION OF DISC DEECTION .. 54
7.1.4 OPERATION FLOWCHART 54
7.2 PARTS 55
7.2.1 IC 55
7.2.2 DISPLAY 58
8. PANEL FACILITIES AND SPECIFICATIONS 59

PIONEER CORPORATION 4-1, Meguro 1-chome, Meguro-ku, Tokyo 153-8654, Japan
PIONEER ELECTRONICS SERVICE, INC. P.O. Box 1760, Long Beach, CA 90801-1760, U.S.A.
PIONEER EUROPE N.V. Haven 1087, Keetberglaan 1, 9120 Melsele, Belgium
PIONEER ELECTRONICS ASIACENTRE PTE. LTD. 253 Alexandra Road, #04-01, Singapore 159936

© PIONEER CORPORATION 2000

T–ZZR JAN. 2000 Printed in Japan

1. SAFETY INFORMATION

This service manual is intended for qualified service technicians ; it is not meant for the casual do-it-yourselfer. Qualified technicians have the necessary test equipment and tools, and have been trained to properly and safely repair complex products such as those covered by this manual.
Improperly performed repairs can adversely affect the safety and reliability of the product and may void the warranty. If you are not qualified to perform the repair of this product properly and safely, you should not risk trying to do so and refer the repair to a qualified service technician.

WARNING
This product contains lead in solder and certain electrical parts contain chemicals which are known to the state of California to cause cancer, birth defects or other reproductive harm.

Health & Safety Code Section 25249.6 – Proposition 65

NOTICE
(FOR CANADIAN MODEL ONLY)
Fuse symbols (fast operating fuse) and/or (slow operating fuse) on PCB indicate that replacement parts must be of identical designation.

REMARQUE
(POUR MODÈLE CANADIEN SEULEMENT)
Les symboles de fusible (fusible de type rapide) et/ou (fusible de type lent) sur CCI indiquent que les pièces de remplacement doivent avoir la même désignation.

(FOR USA MODEL ONLY)

1. SAFETY PRECAUTIONS

The following check should be performed for the continued protection of the customer and service technician.

LEAKAGE CURRENT CHECK

Measure leakage current to a known earth ground (water pipe, conduit, etc.) by connecting a leakage current tester such as Simpson Model 229-2 or equivalent between the earth ground and all exposed metal parts of the appliance (input/output terminals, screwheads, metal overlays, control shaft, etc.). Plug the AC line cord of the appliance directly into a 120V AC 60Hz outlet and turn the AC power switch on. Any current measured must not exceed 0.5mA.

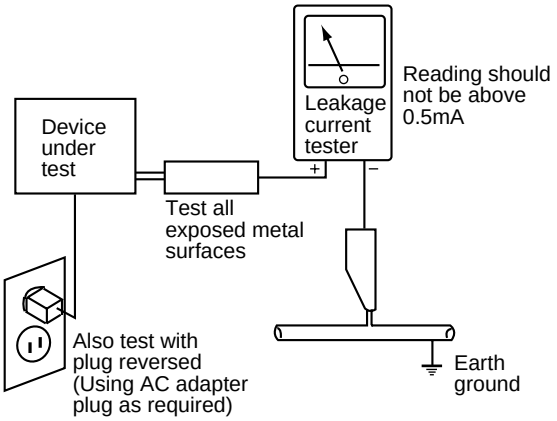

AC Leakage Test

ANY MEASUREMENTS NOT WITHIN THE LIMITS OUTLINED ABOVE ARE INDICATIVE OF A POTENTIAL SHOCK HAZARD AND MUST BE CORRECTED BEFORE RETURNING THE APPLIANCE TO THE CUSTOMER.

2. PRODUCT SAFETY NOTICE

Many electrical and mechanical parts in the appliance have special safety related characteristics. These are often not evident from visual inspection nor the protection afforded by them necessarily can be obtained by using replacement components rated for voltage, wattage, etc. Replacement parts which have these special safety characteristics are identified in this Service Manual.

Electrical components having such features are identified by marking with a ⚠ on the schematics and on the parts list in this Service Manual.
The use of a substitute replacement component which does not have the same safety characteristics as the PIONEER recommended replacement one, shown in the parts list in this Service Manual, may create shock, fire, or other hazards.

Product Safety is continuously under review and new instructions are issued from time to time. For the latest information, always consult the current PIONEER Service Manual. A subscription to, or additional copies of, PIONEER Service Manual may be obtained at a nominal charge from PIONEER.

IMPORTANT

THIS PIONEER APPARATUS CONTAINS LASER OF CLASS 1.
SERVICING OPERATION OF THE APPARATUS SHOULD BE DONE BY A SPECIALLY INSTRUCTED PERSON.

LASER DIODE CHARACTERISTICS
MAXIMUM OUTPUT POWER: 7 mW
WAVELENGTH: 780 – 785 nm

LABEL CHECK

PD-F1009/MY : Only

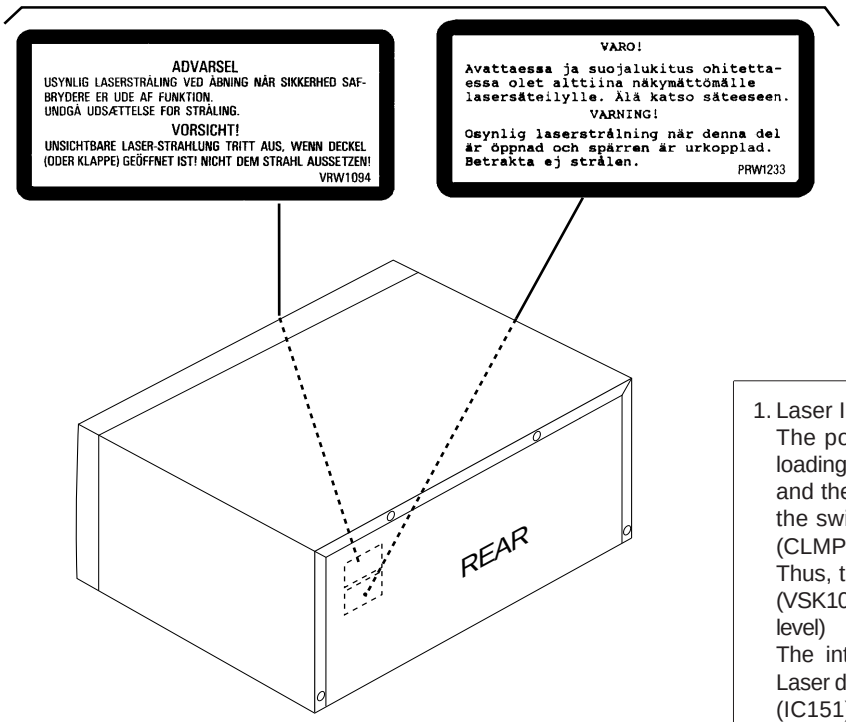

Additional Laser Caution

1. Laser Interlock Mechanism
   The position of the switch (VSK1011) for detecting loading state is detected by the system microprocessor, and the design prevents laser diode oscillation when the switch (VSK1011) is not on CLMP terminal side (CLMP signal is OFF or high level).
   Thus, the interlock will no longer function if the switch (VSK1011) is deliberatery set to CLMP terminal side. (low level)
   The interlock also does not function in the test mode *.
   Laser diode oscillation will continue, if pin 1 of CXA2570N (IC151) on the MAIN BOARD ASSY is connected to GND, or pin 14 of IC301 (LDON) is connected to low level (ON), or else the terminals of Q151 are shorted to each other (fault condition).

2. When the cover is opened, close viewing of the objective lens with the naked eye will cause exposure to a Class 1 laser beam.

* Refer to page 45 .

2. EXPLODED VIEWS AND PARTS LIST

NOTES :
- *Parts marked by " NSP " are generally unavailable because they are not in our Master Spare Parts List.*
- *The ⚠ mark found on some component parts indicates the importance of the safety factor of the part. Therefore, when replacing, be sure to use parts of identical designation.*
- *Screw adjacent to ▼ mark on the product are used for disassembly.*

2.1 PACKING

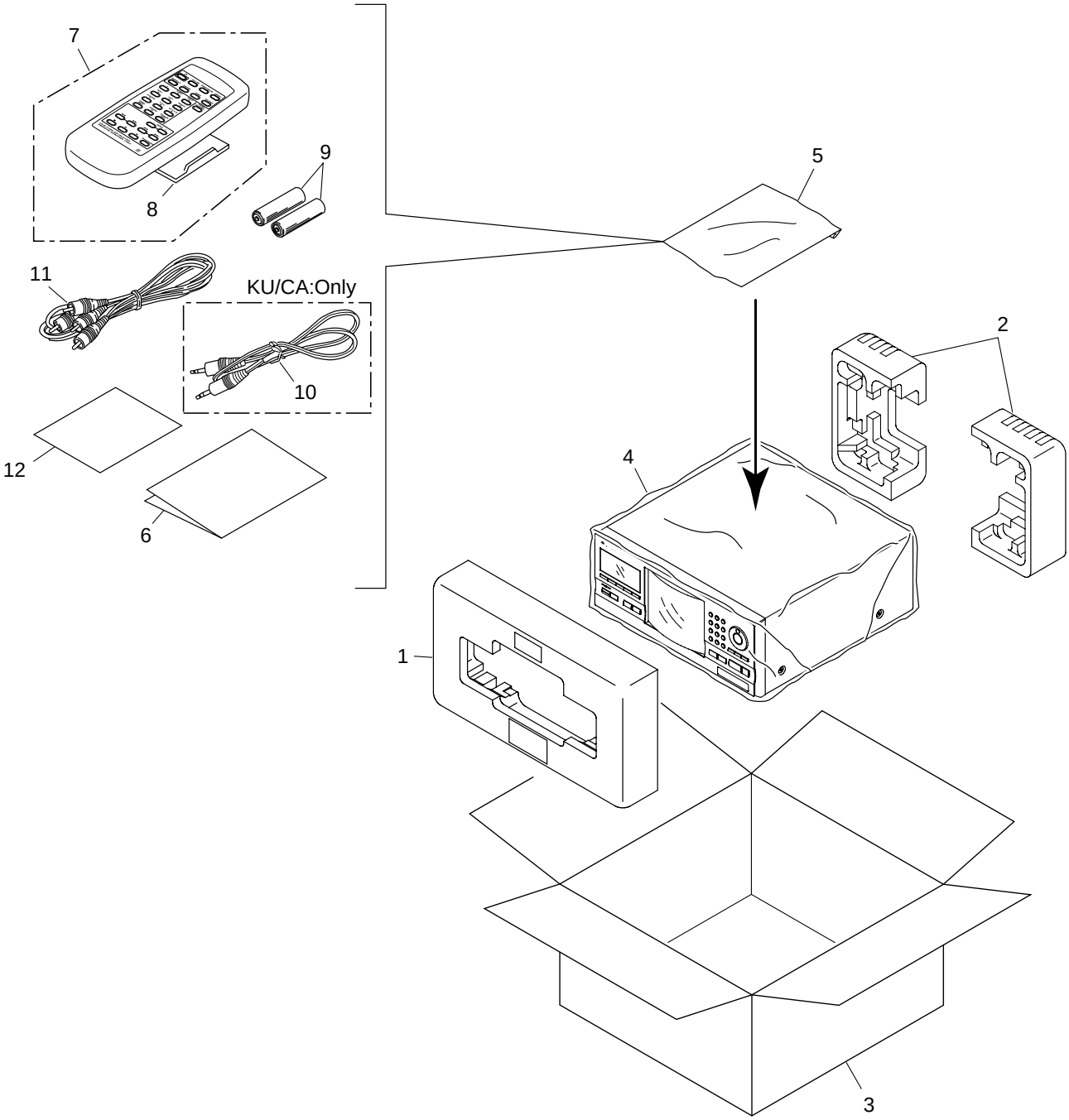

(1) PACKING PARTS LIST

Mark	No.	Description	Part No.
	1	Styrol Protector F	PHA1325
	2	Styrol Protector R	PHA1326
	3	Packing Case	See Contrast table (2)
	4	Packing Sheet	RHC1023
	5	Polyethylene Bag (0.03 × 230 × 340)	Z21–038
	6	Operating Instructions	See Contrast table (2)
	7	Remote Control Unit	PWW1168
	8	Battery Cover	AZA7204
NSP	9	Dry Cell Batteries (R6P, AA)	VEM–013
	10	Control Cable (L=1 m)	See Contrast table (2)
	11	Audio Cable (L=1 m)	PDE1248
NSP	12	Warranty Card	See Contrast table (2)

(2) CONTRAST TABLE

PD-F1009/KU/CA and PD-F1009/MY are constructed the same except for the following:

Mark	No.	Symbol and Description	Part No.		Remarks
			PD-F1009 /KU/CA	PD-F1009 /MY	
	3	Packing Case	PHG2397	PHG2398	
	6	Operating Instructions (English)	PRB1300	Not used	
	6	Operating Instructions (English/French/German/Italian /Dutch/Swedish/Spanish/Portuguese)	Not used	PRE1288	
	10	Control Cable (L=1 m)	PDE1247	Not used	
NSP	12	Warranty Card	ARY7045	ARY7022	

2.2 EXTERIOR (1/2)

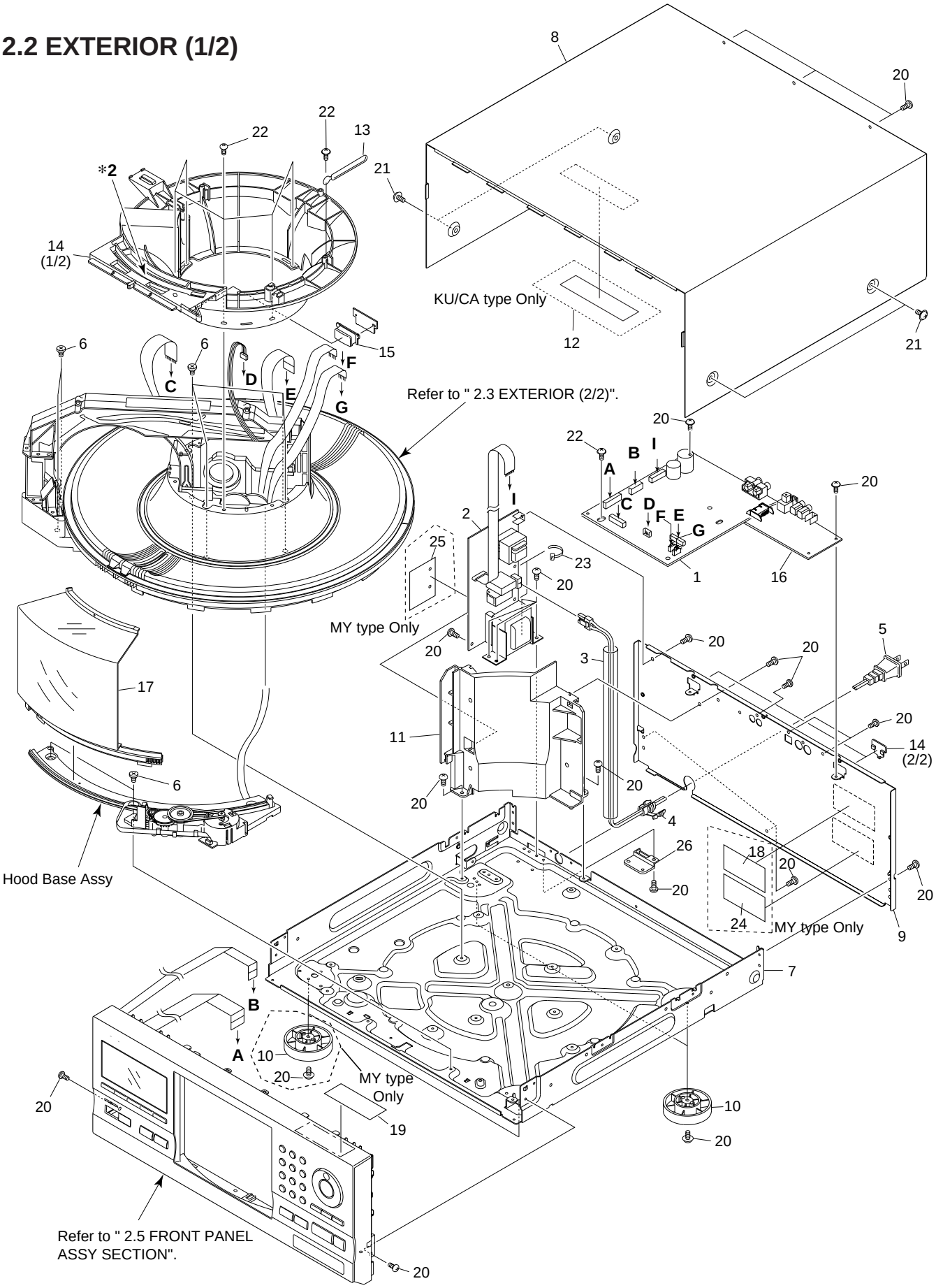

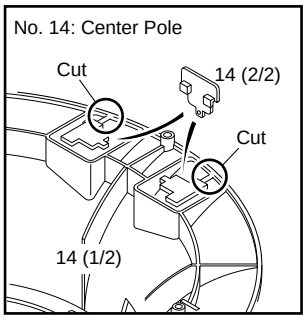

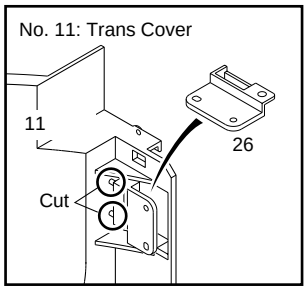

■ Hood Base Assy Section

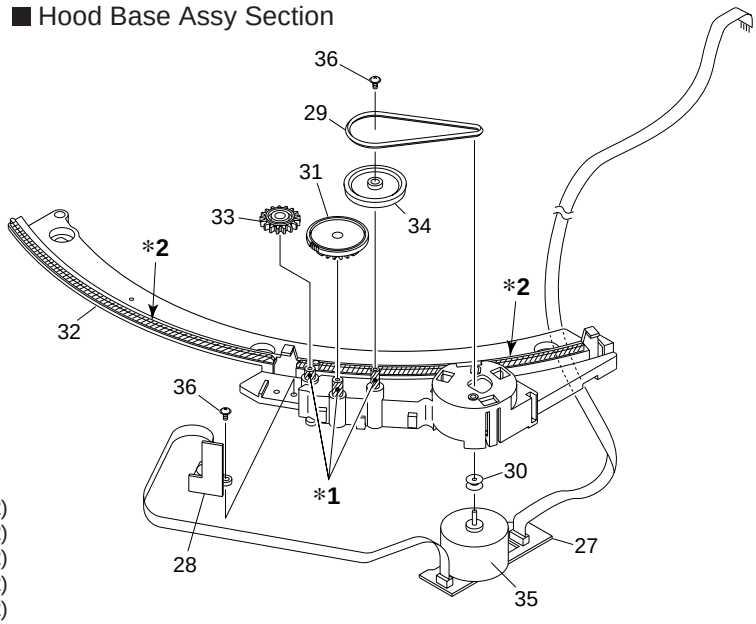

(1) EXTERIOR (1/2) PARTS LIST

Mark	No.	Description	Part No.
	1	MAIN BOARD ASSY	See Contrast table (2)
	2	POWER BOARD ASSY	See Contrast table (2)
NSP	3	Vinyl Tube	See Contrast table (2)
	4	Strain Relief	See Contrast table (2)
⚠	5	AC Power Cord	See Contrast table (2)
	6	Screw C	PBA1106
NSP	7	Under Base	PNA2421
	8	Bonnet Case	PYY1255
	9	Rear Base	See Contrast table (2)
	10	Insulator	See Contrast table (2)
	11	Trans Cover	VNK4542
	12	65 Label	See Contrast table (2)
	13	Cord Clamper	RNH–184
	14	Center Pole	PNW2792
	15	CR Spacer	PNW2961
	16	SR BOARD ASSY	See Contrast table (2)
	17	Hood	PNW2793
	18	Caution Label (HE)	See Contrast table (2)
	19	Caution Label	See Contrast table (2)
	20	Screw	BBZ30P080FZK
	21	Screw	FBT40P080FZK
	22	Screw	IPZ30P080FMC
	23	Binder	ZCA–SKB90BK
	24	Caution Label	See Contrast table (2)
	25	Screw Cover	See Contrast table (2)

Mark	No.	Description	Part No.
	26	Trans Cover	PNW2802

■ Hood Base Assy Section

NSP	27	DOOR MOTOR BOARD ASSY	PWZ4061
NSP	28	DOOR SW BOARD ASSY	PWZ4062
	29	Belt	PEB1300
	30	Motor Pulley	PNW1634
	31	Gear AW	PNW2906
	32	Hood Base	PNW2791
	33	Gear M1	PNW2800
	34	Gear Pulley	VNL1662
	35	Slider Motor	VXM1033
	36	Screw	IPZ20P080FMC
	*1	Froil 397 (for service)	GYA1001
	*2	Ha Narl PN955R (for service)	GEM1016

(2) CONTRAST TABLE

PD-F1009/KU/CA and PD-F1009/MY are constructed the same except for the following:

Mark	No.	Symbol and Description	Part No.		Remarks
			PD-F1009 /KU/CA	PD-F1009 /MY	
	1	MAIN BOARD ASSY	PWZ4036	PWZ4037	
	2	POWER BOARD ASSY	PWZ4048	PWZ4049	
NSP	3	Vinyl Tube	Not used	ZUA-AH6-14R3	
⚠	4	Strain Relief	CM-22C	CM-22B	
⚠	5	AC Power Cord	ADG7024	VDG1061	
	9	Rear Base	PNA2529	PNA2530	
	10	Insulator	AMR7198	PNW2766	
	12	65 Label	ARW7050	Not used	
	16	SR BOARD ASSY	PWZ4042	PWZ4043	
	18	Caution Label (HE)	Not used	PRW1233	
	19	Caution Label	VRW1817	PRW1562	
	24	Caution Label	Not used	VRW1094	
	25	Screw Cover	Not used	PNM1340	

2.3 EXTERIOR (2/2)

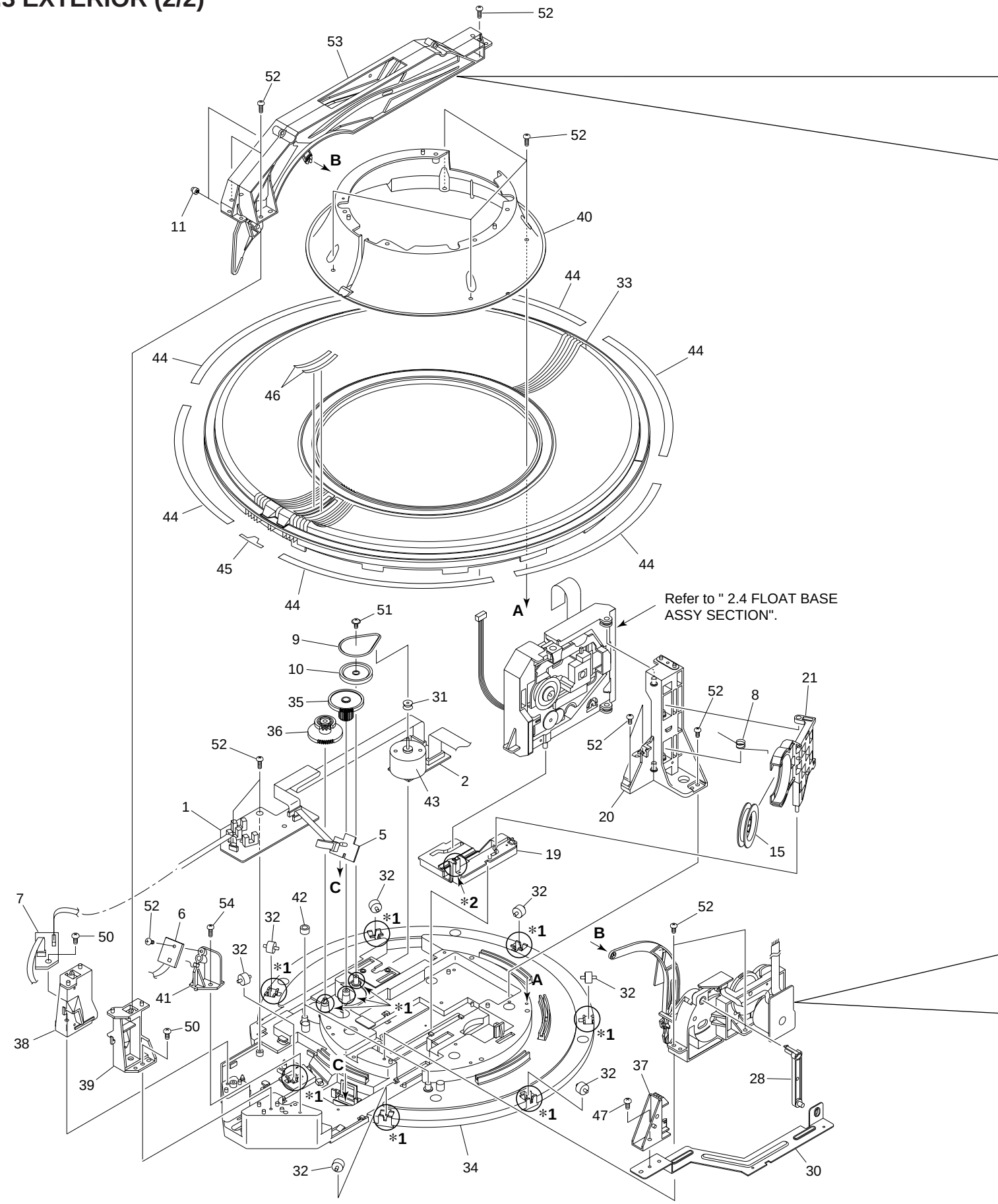

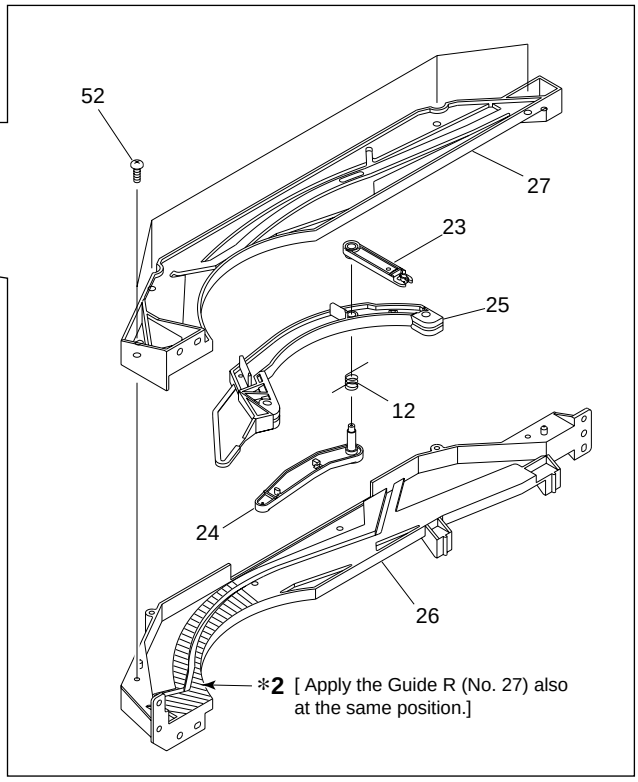

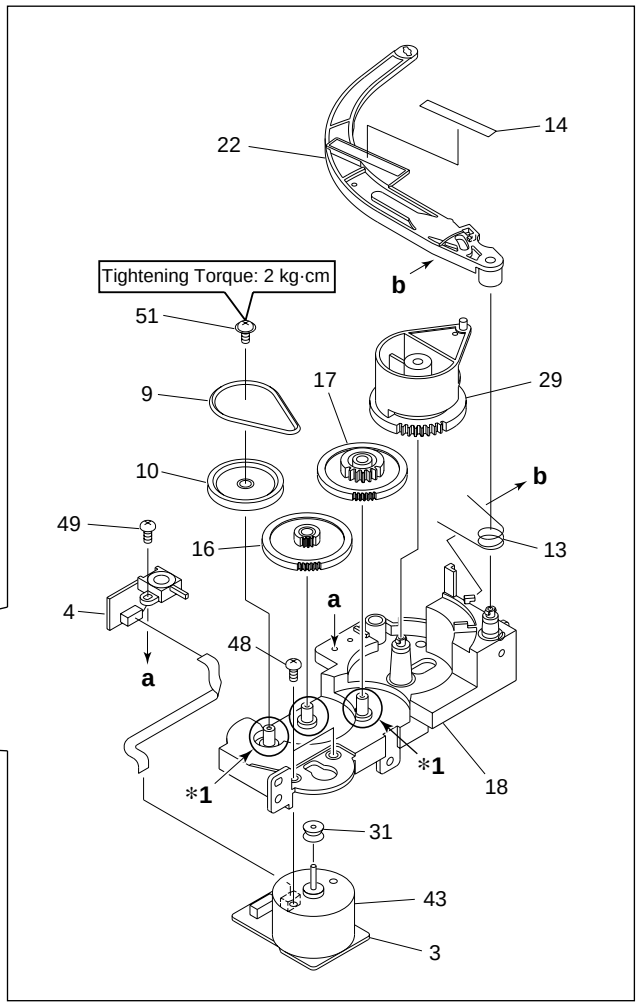

EXTERIOR (2/2) PARTS LIST

Mark	No.	Description	Part No.
NSP	1	SENSOR BOARD ASSY	PWZ3781
NSP	2	SELECT BOARD ASSY	PWZ3785
NSP	3	LOADING BOARD ASSY	PWZ3788
NSP	4	LOADING SW BOARD ASSY	PWZ3790
NSP	5	RADIATE BOARD ASSY	PWZ3791
NSP	6	RECEIVE BOARD ASSY	PWZ3792
NSP	7	VOLUME BOARD ASSY	PWZ4063
	8	Clamp Spring	ABH7107
	9	Loading Belt	AEB7029
	10	Gear Pulley B	ANW7062
	11	Roller B	ANW7075
NSP	12	Arm Spring	PBH1225
	13	L Arm Spring	PBH1226
	14	Sheet	PED1028
	15	Clamper	PNW2743
	16	Gear 1	PNW2819
	17	Gear 2	PNW2820
	18	Gear Holder	PNW2822
	19	Slider Cam	PNW2823
	20	Clamp Pole	PNW2826
	21	Clamp Holder	PNW2827
	22	Drive Arm	PNW2829
NSP	23	Link	PNW2830
NSP	24	L Slider	PNW2831
NSP	25	L Arm	PNW2832
NSP	26	Guide L	PNW2833
NSP	27	Guide R	PNW2834
	28	Link L	PNW2844
	29	Drive Cam	PNW2873
	30	Lock Plate	PNA2438
	31	Motor Pulley	PNW1634
	32	Roller	PNW2647
	33	Disc Rack	PNW2790
	34	Rack Base	PNW2835
	35	ST Gear 0.6	PNW2836
	36	ST Gear 1.0	PNW2837
	37	Disc Divider	PNW2838
	38	Guide Support L	PNW2839
	39	Guide Support R	PNW2840
	40	Disc Guard	PNW2841
	41	Sensor Stay	PNW2842
	42	Guide Roller	PNW2843
	43	Slider Motor	VXM1033
	44	Rack Label	PAM1770
	45	S Label	PAM1771
	46	+1 Label	PRW1507
	47	Screw	BBZ30P080FZK
	48	Screw	BMZ26P040FZK
	49	Screw	BPZ26P060FMC
	50	Screw	BPZ30P100FCU
	51	Screw	IPZ20P080FMC
	52	Screw	PPZ30P080FMC
	53	Arm Assy	PXA1615
	54	Screw	IPZ30P080FMC
	*1	Froil 397 (for service)	GYA1001
	*2	Ha Narl PN955R (for service)	GEM1016

2.4 FLOAT BASE ASSY SECTION

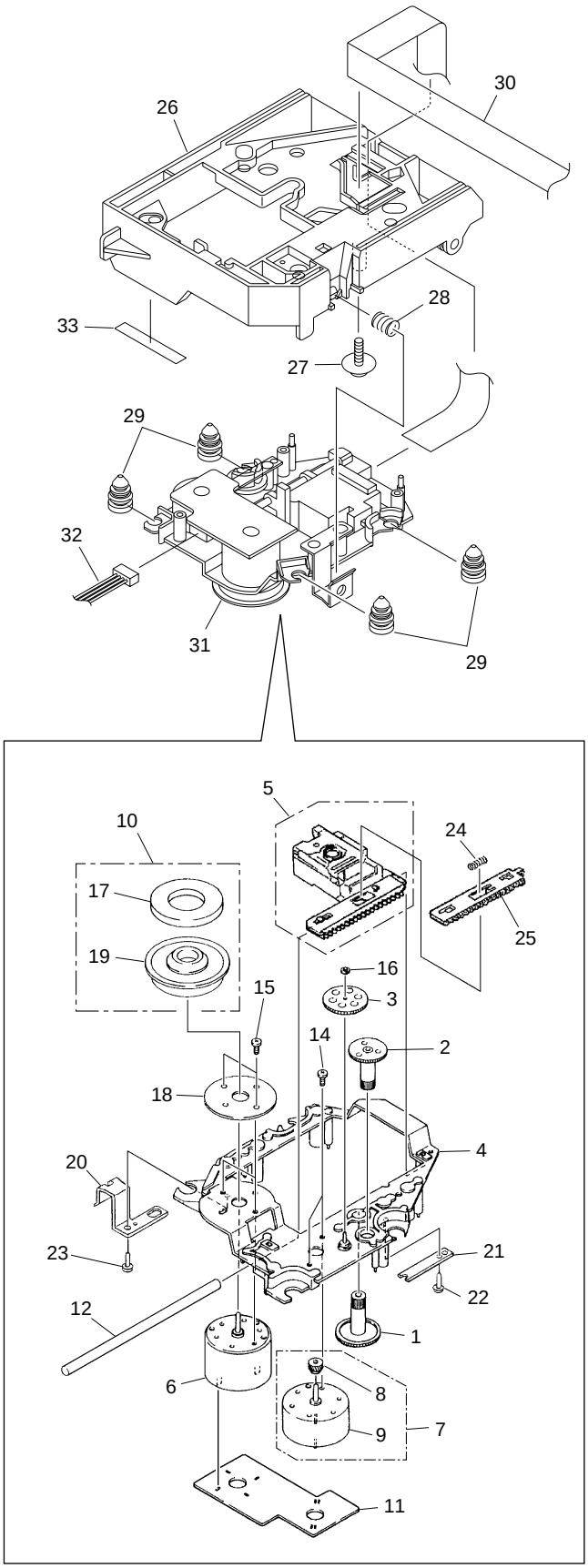

● How to Install the Disc Table

1 Use nipper or other tool to cut the three sections marked Ⓐ in figure 1. Then remove the spacer

2 While supporting the spindle motor shaft with the stopper, put spacer on top of the yoke M, and stick the disc table on top (takes about 9kg pressure). Detach the spacer.

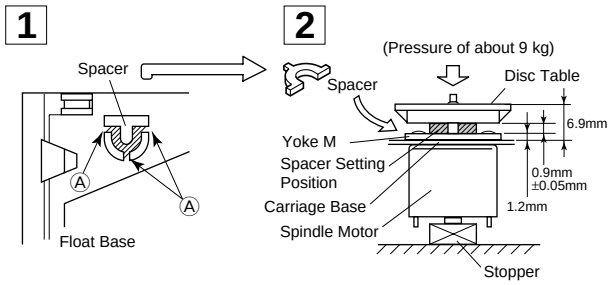

FLOAT BASE ASSY SECTION PARTS LIST

Mark	No.	Description	Part No.
	1	Gear 1	PNW2052
	2	Gear 2	PNW2053
	3	Gear 3	PNW2054
	4	Carriage Base	PNW2699
	5	Pickup Assy - S	PEA1335
	6	D.C. Motor Assy (SPINDLE)	PEA1235
	7	Carriage DC Motor Assy	PEA1246
	8	Pinion Gear	PNW2055
	9	Carriage DC Motor/0.3W	PXM1027
	10	Disc Table Assy	PEA1314
	11	Mechanism Board Assy	PWX1192
	12	Guide Bar	PLA1094
	13	……	
	14	Screw	JFZ17P025FZK
	15	Screw	JFZ20P040FMC
	16	Washer	WT12D032D025
	17	Clamp Magnet	PMF1014
	18	Yoke M	PNB1312
NSP	19	Disc Table	PNW2410
NSP	20	Float Angle	ANB7020
	21	Gear Stopper	PNB1303
	22	Screw	BPZ20P060FMC
	23	Screw	BPZ26P100FMC
	24	PU Rack Spring	ABH7077
	25	Rack Holder	PNW2056
	26	Float Base	PNW2828
	27	Screw	ABA7009
	28	Float Spring	ABH7049
	29	Float Rubber	AEB7028
	30	16P F·F·C/30V	PDD1185
NSP	31	Servo Mechanism Assy GM	PXA1591
	32	Connector Assy (4P)	RDE1043
	33	Sheet	PED1028

2.5 FRONT PANEL ASSY SECTION

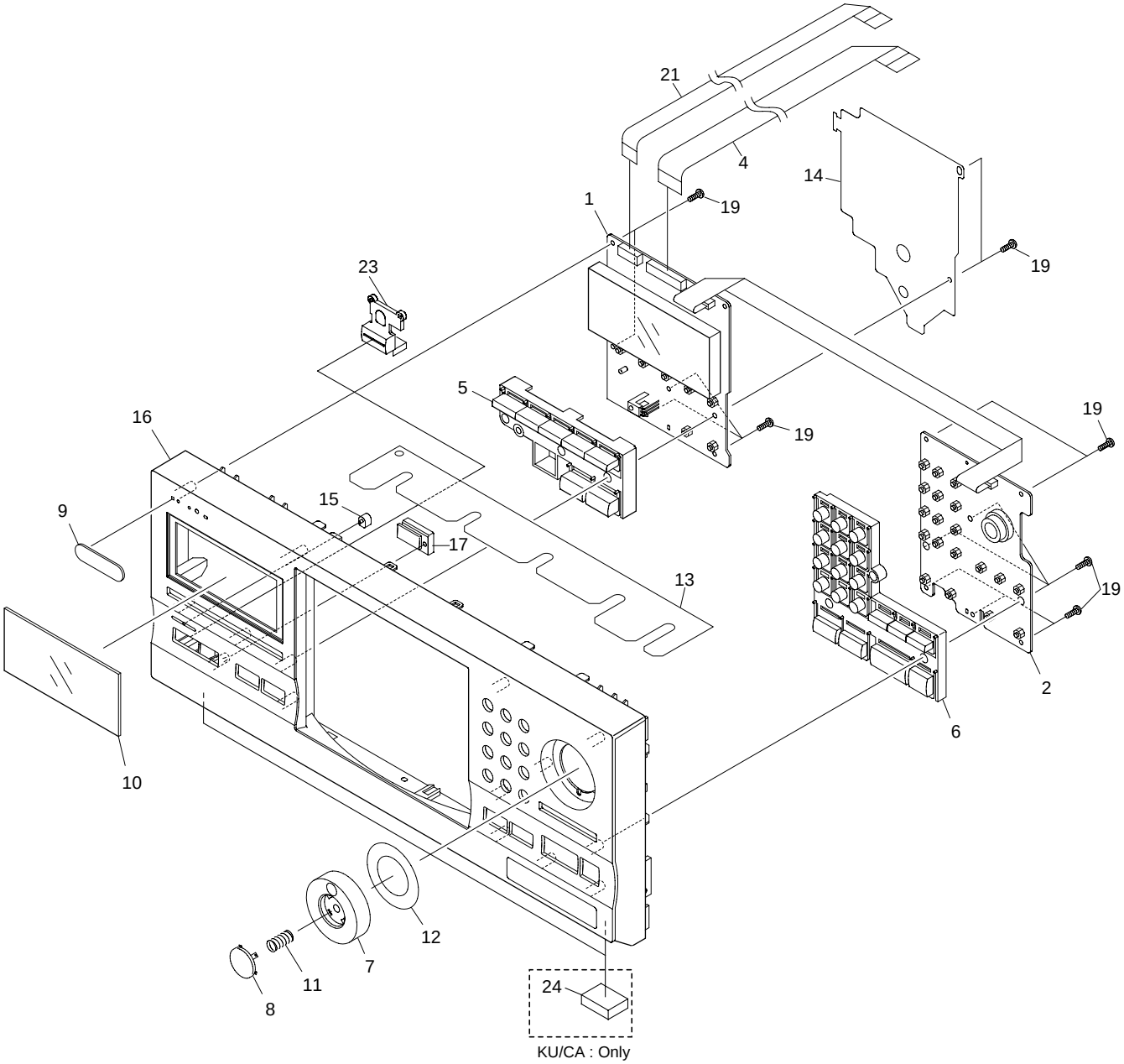

(1) FRONT PANEL ASSY SECTION PARTS LIST

Mark	No.	Description	Part No.
	1	DISPLAY BOARD ASSY	See Contrast table (2)
	2	CONTROL BOARD ASSY	PWZ4057
	3	• • • •	
	4	26P F·F·C / 60V	ADD7118
	5	MODE Button	PAC1994
	6	PLAY Button	PAC1995
	7	Jog Dial	PAC1882
	8	ENTER Button	PAC1883
	9	Name Plate	PAM1776
	10	Display Window	See Contrast table (2)
	11	Enter Spring	PBH1228
	12	Jog Sheet	PEC1042
	13	FC Cover	PNM1323
	14	PCB Cover	PNM1324
	15	LED Lens	PNW2019
	16	Operation Panel	See Contrast table (2)
	17	Sensor Lens	PNW2804
	18	• • • •	
	19	Screw	PPZ30P100FMC
	20	• • • •	
	21	16P F.F.C / 60V	PDD1203
	22	• • • •	
	23	Power Button	VNK4527
	24	Rubber Sheet	See Contrast table (2)

(2) CONTRAST TABLE

PD-F1009/KU/CA and PD-F1009/MY are constructed the same except for the following:

Mark	No.	Symbol and Description	Part No.		Remarks
			PD-F1009 /KU/CA	PD-F1009 /MY	
	1	DISPLAY BOARD ASSY	PWZ4053	PWZ4054	
	10	Display Window	PAM1816	PAM1817	
	16	Operation Panel	PNW2958	PNW2959	
	24	Rubber Sheet	AEB1111	Not used	

3. BLOCK DIAGRAM AND SCHEMATIC DIAGRAM

3.1 BLOCK DIAGRAM

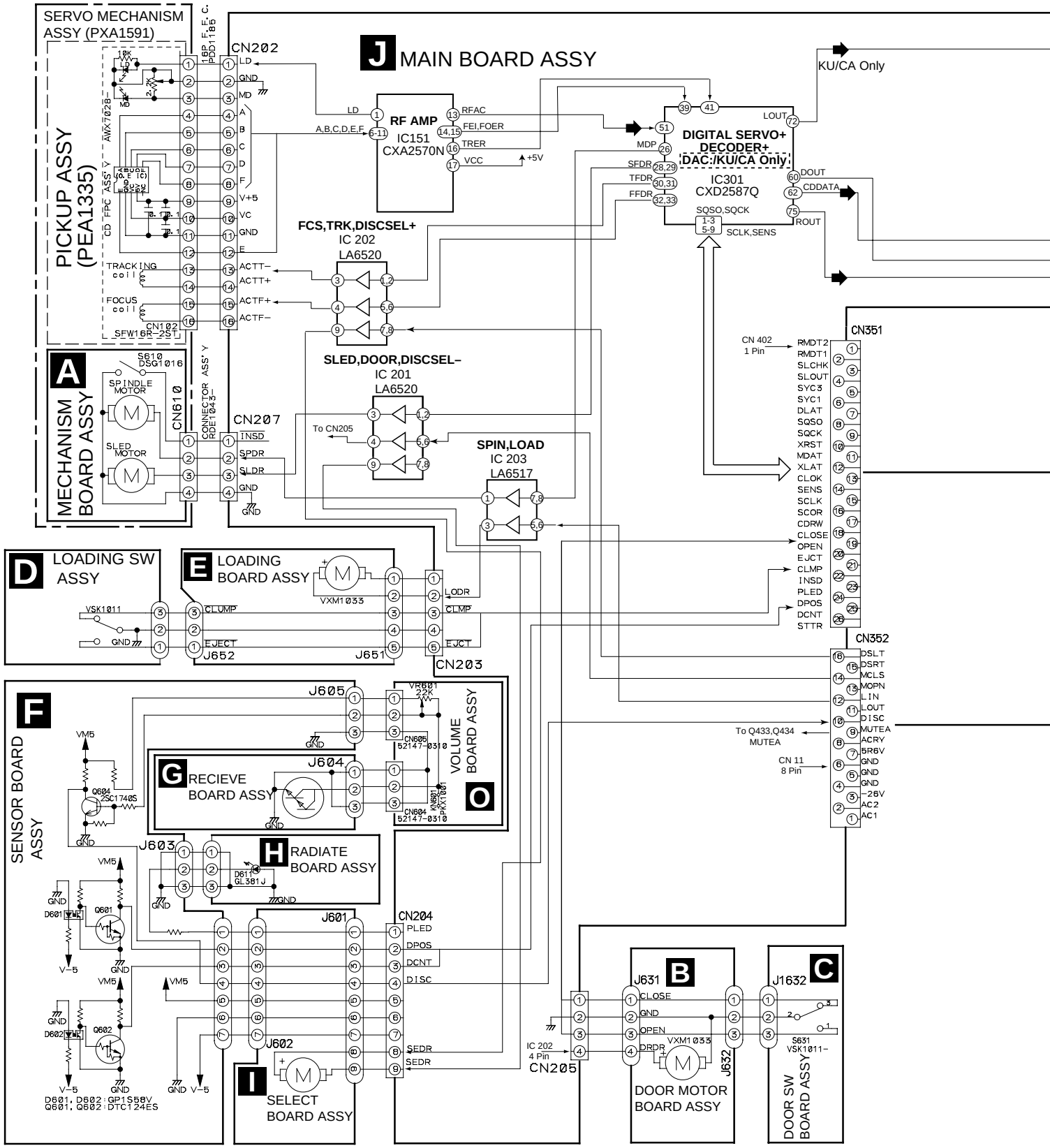

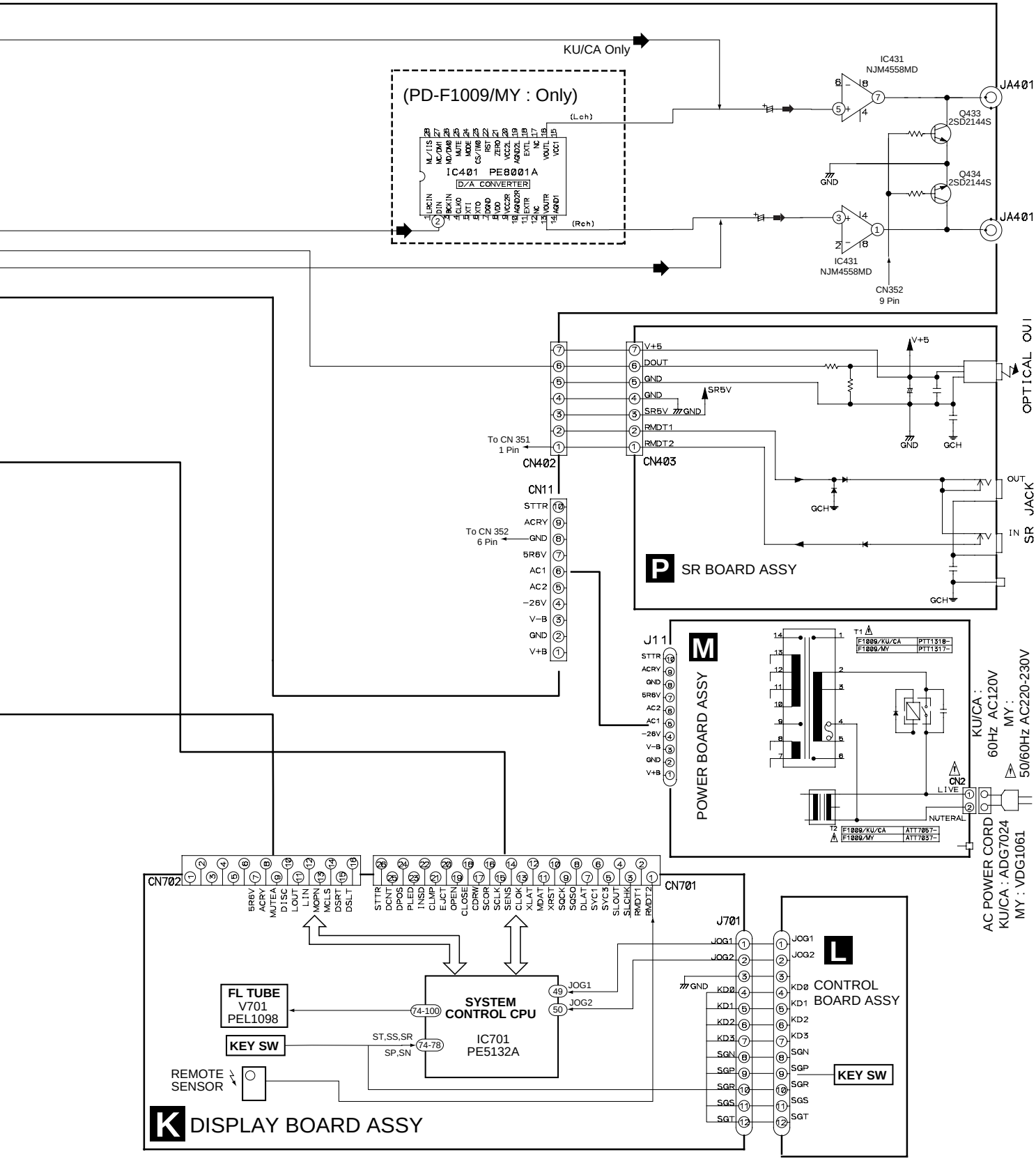
KU/CA Only
(PD-F1009/MY : Only)
IC401 PE8001A
D/A CONVERTER
(Lch)
(Rch)
IC431
NJM4558MD
JA401
Q433
2SD2144S
Q434
2SD2144S
GND
CN352
9 Pin
V+5
DOUT
GND
SR5V
RMDT1
RMDT2
To CN 351
1 Pin
CN402
CN403
OPTICAL OUT
SR JACK
OUT
IN
GCH
CN11
STTR
ACRY
GND
5R6V
AC1
AC2
−26V
V−B
V+B
To CN 352
6 Pin
P SR BOARD ASSY
J11
M
POWER BOARD ASSY
T1
F1009/KU/CA PTT1318−
F1009/MY PTT1317−
T2
F1009/KU/CA ATT7057−
F1009/MY ATT7037−
CN2
LIVE
NUTERAL
KU/CA : 60Hz AC120V
MY : 50/60Hz AC220-230V
AC POWER CORD
KU/CA : ADG7024
MY : VDG1061
CN702
CN701
5R6V
ACRY
MUTEA
DISC
LOUT
LIN
MOPN
MCLS
DSRT
DSLT
STTR
DCNT
DPOS
PLED
INSD
CLMP
EJCT
OPEN
CLOSE
CDRW
SCOR
SCLK
SENS
CLOK
XLAT
MDAT
XRST
SOCK
SQSO
DLAT
SYC1
SYC3
SLOUT
SLCHK
RMDT1
RMDT2
J701
JOG1
JOG2
KD0
KD1
KD2
KD3
SGN
SGP
SGR
SGS
SGT
L CONTROL BOARD ASSY
KEY SW
FL TUBE
V701
PEL1098
KEY SW
SYSTEM CONTROL CPU
IC701
PE5132A
ST,SS,SR
SP,SN
REMOTE SENSOR
K DISPLAY BOARD ASSY

3.2 OVERALL WIRING DIAGRAM

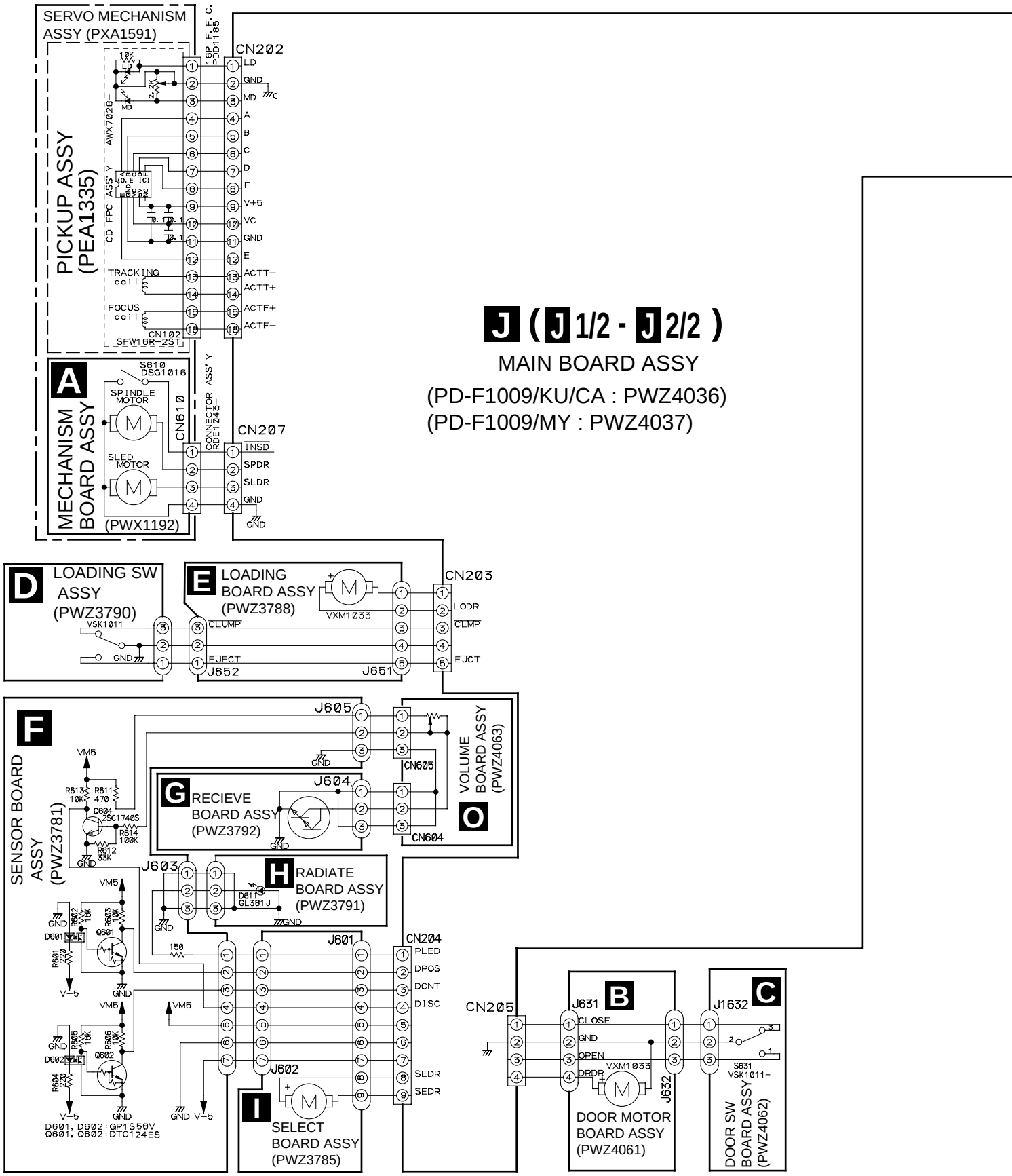

Note : When ordering service parts, be sure to refer to "EXPLODED VIEWS and PARTS LIST" or "PCB PARTS LIST".

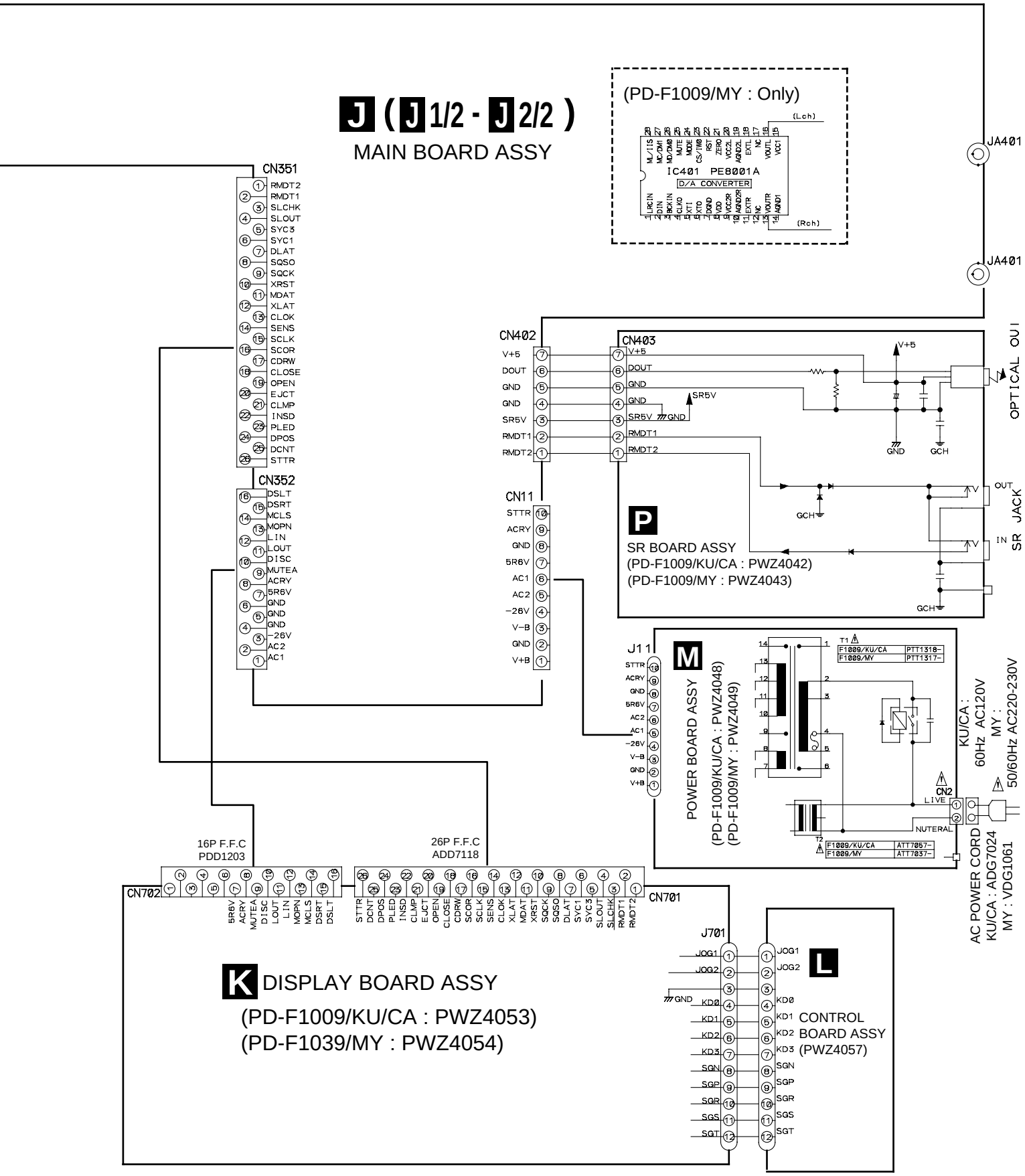

3.3 MECHANISM BOARD, DOOR MOTOR BOARD, DOOR SW BOARD and PICKUP ASSYS

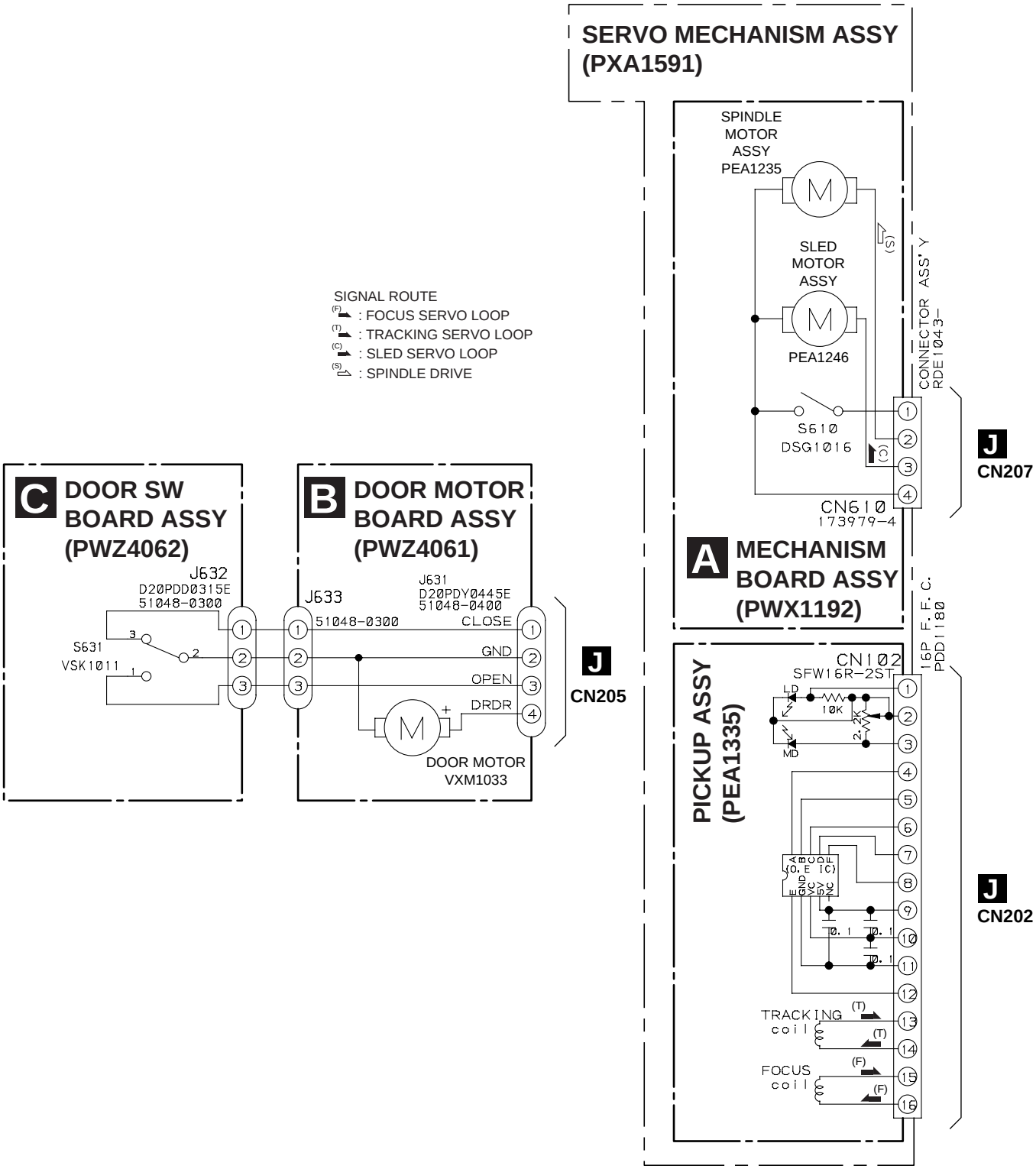

3.4 LOADING SW, LOADING BOARD, SENSOR BOARD, RECIEVE BOARD, RADIATE BOARD and SELECT BOARD ASSYS

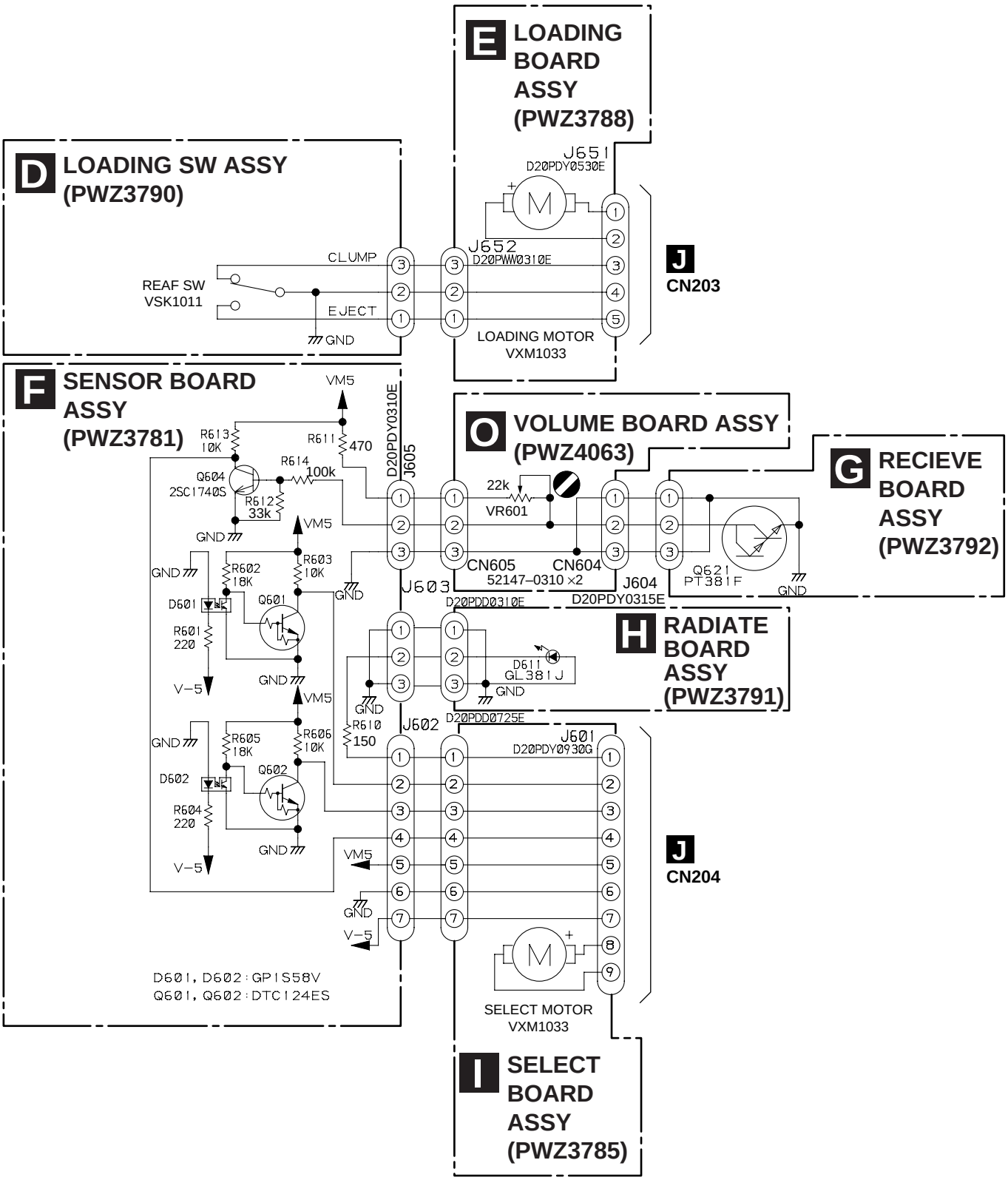

3.5 MAIN BOARD ASSY

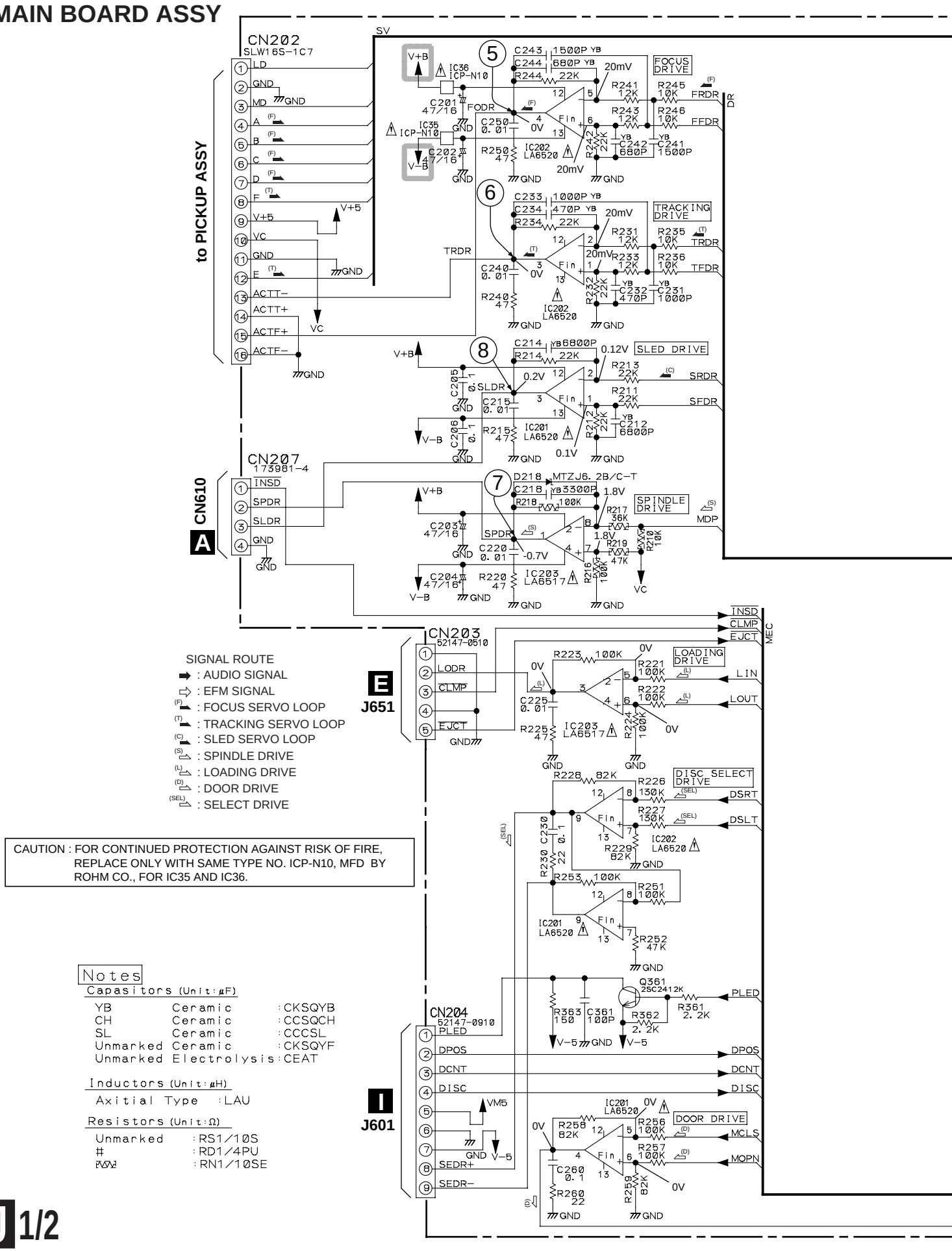

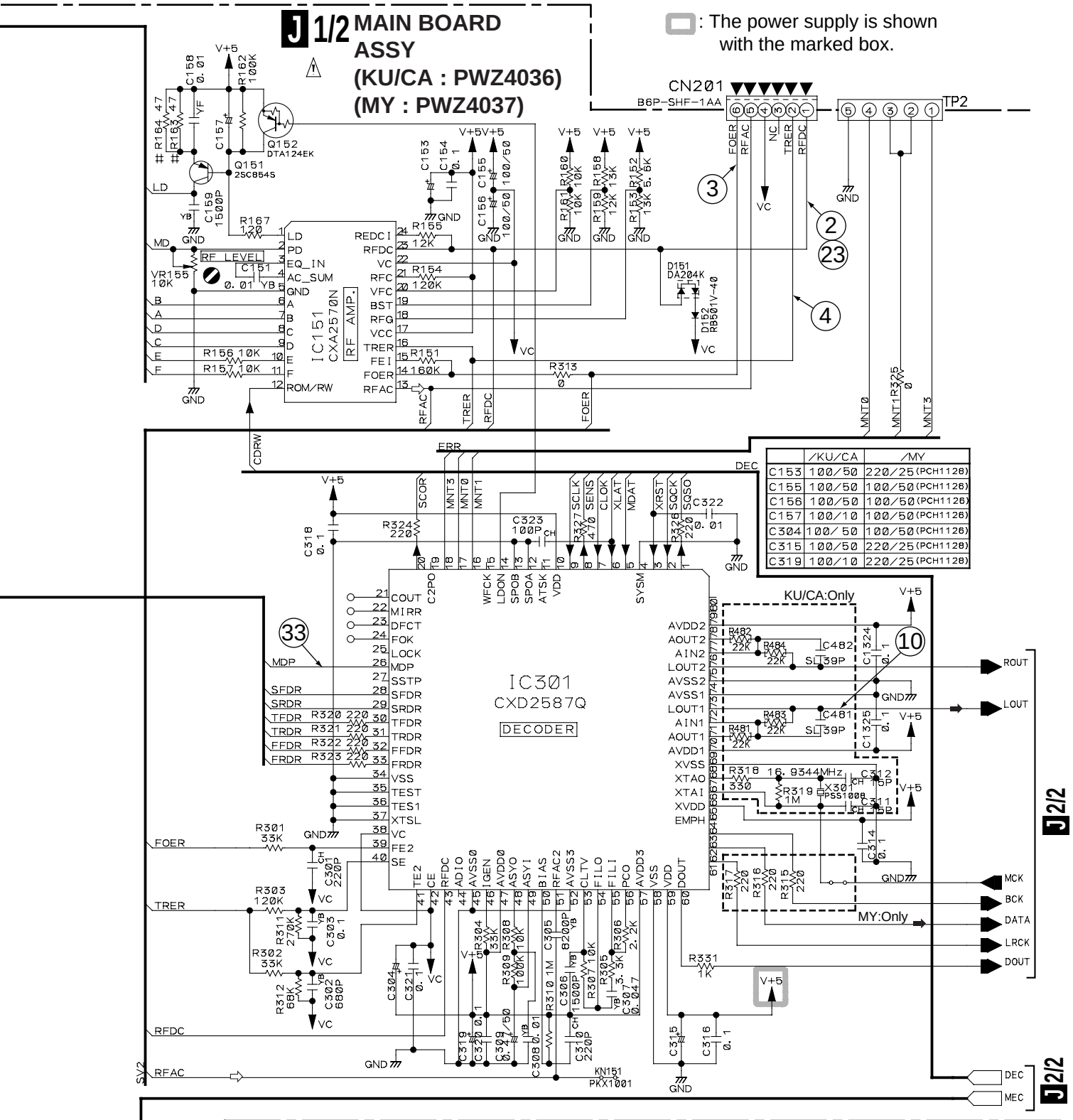

	/KU/CA	/MY
C153	100/50	220/25(PCH1128)
C155	100/50	100/50(PCH1126)
C156	100/50	100/50(PCH1126)
C157	100/10	100/50(PCH1126)
C304	100/ 50	100/50(PCH1126)
C315	100/50	220/25(PCH1128)
C319	100/10	220/25(PCH1128)

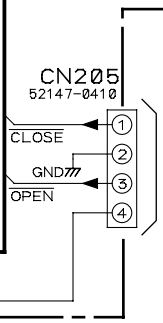

IC301(CXD2587Q) :PLAY MODE

PIN No.	1	2	3	4	5	6	7	8	9	10	11	12	13	14	15	16-17
Voltage(V)	1.1-2.0	4.8	4.8	0	0.38-0.56	4.8	4.5	1.2-1.6	4.8	5.0	—	0	0	5	—	0

PIN No.	18	19	20	21-22	23	24	25	26	27	28	29	30	31	32	33	34-37	38-42
Voltage(V)	4.5	—	0.03	—	0	5.0	—	2.5	—	0.02-0.2	0	0.03-0.09	0.02-0.04	0.05-0.08	0.06-0.08	0	2.5

PIN No.	43	44	45	46	47	48	49	50	51	52	53-55	56	57	58	59	60-63
Voltage(V)	3.4	—	0	1.4	5	2.6	2.5	0.84	2.5	0	3.2	2.6	5.0	0	5.0	2.5

PIN No.	64	65	66	67	68	69	70	71-72	73-74	75-76	77	78	79	80		
Voltage(V)	—	5.0	2.5	2.6	0	5.0	2.1	2.2	0	2.1	2.2	5.0	—	—		

3.6 MAIN BOARD AND SR BOARD ASSYS

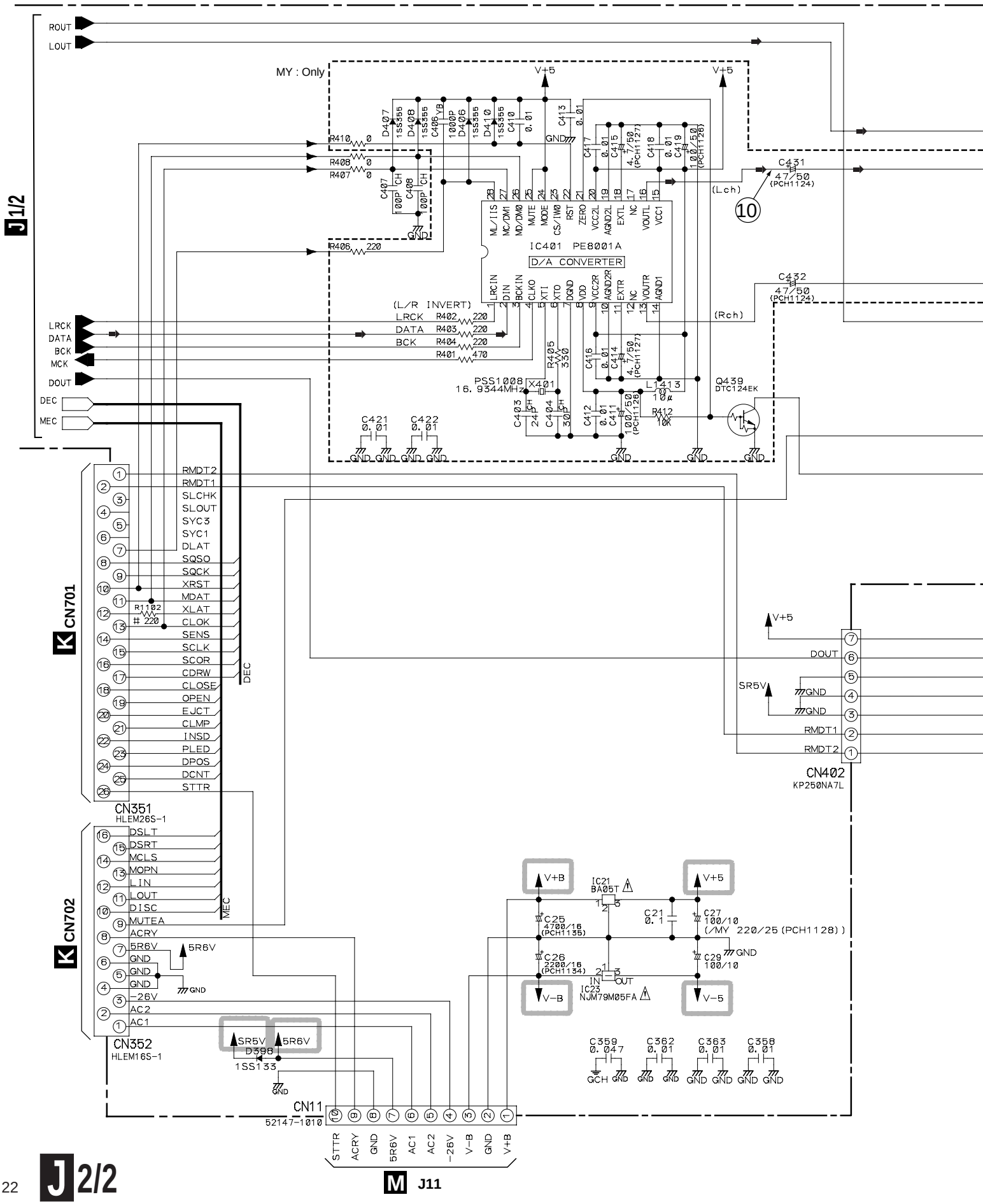

	/KU/CA	/MY		/KU/CA	/MY
R437, 438	5. 6K	1. 8K	C435, 436	NONE	1500P
R439, 440	10K	NONE	C437, 438	120P	NONE
R441, 442	10K	10K	C439, 440	NONE	1500P
R443, 444	10K	NONE	C441, 442	22/25	47/50 (PCH1124)
R445, 446	10K	10K			

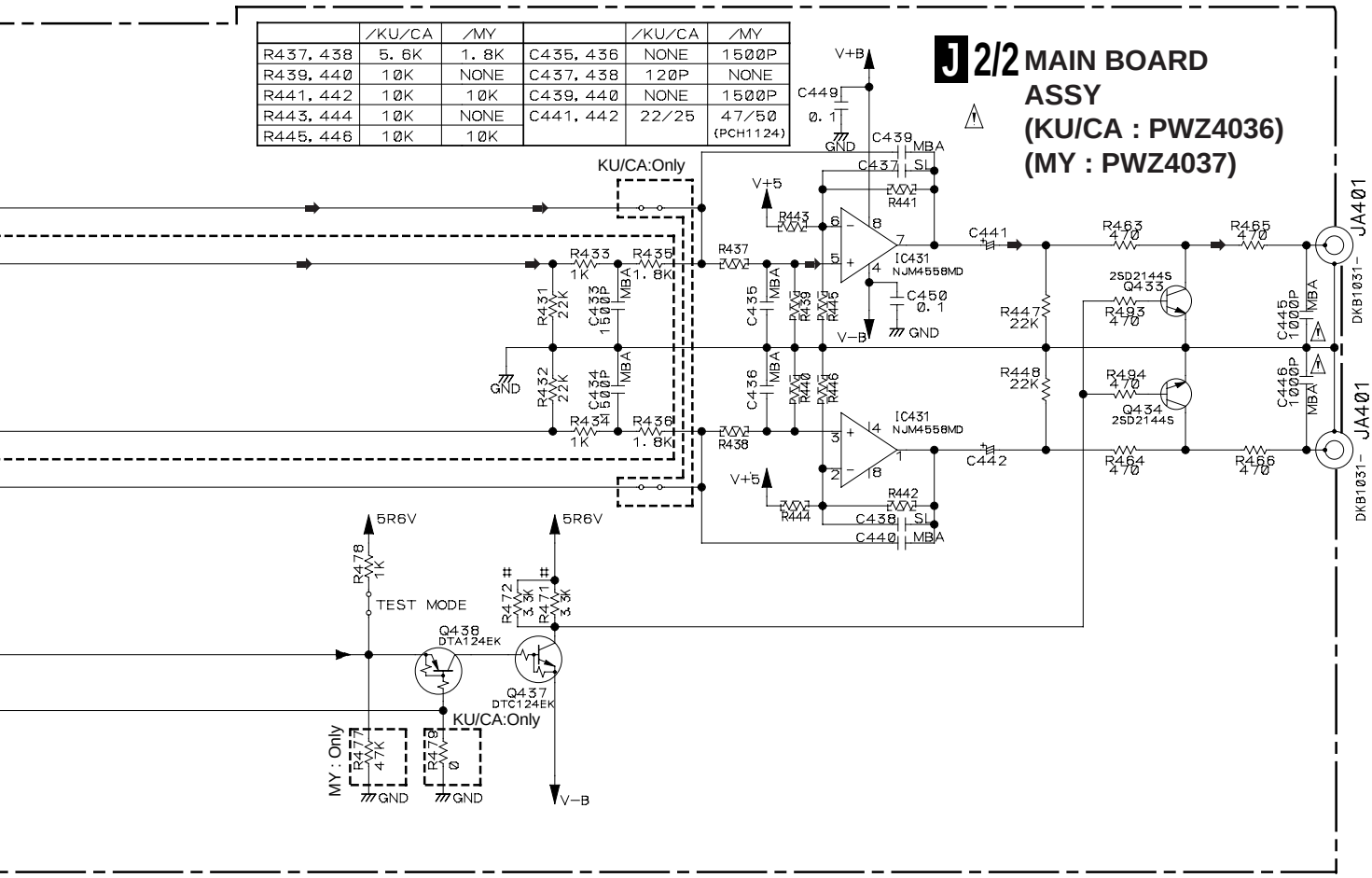

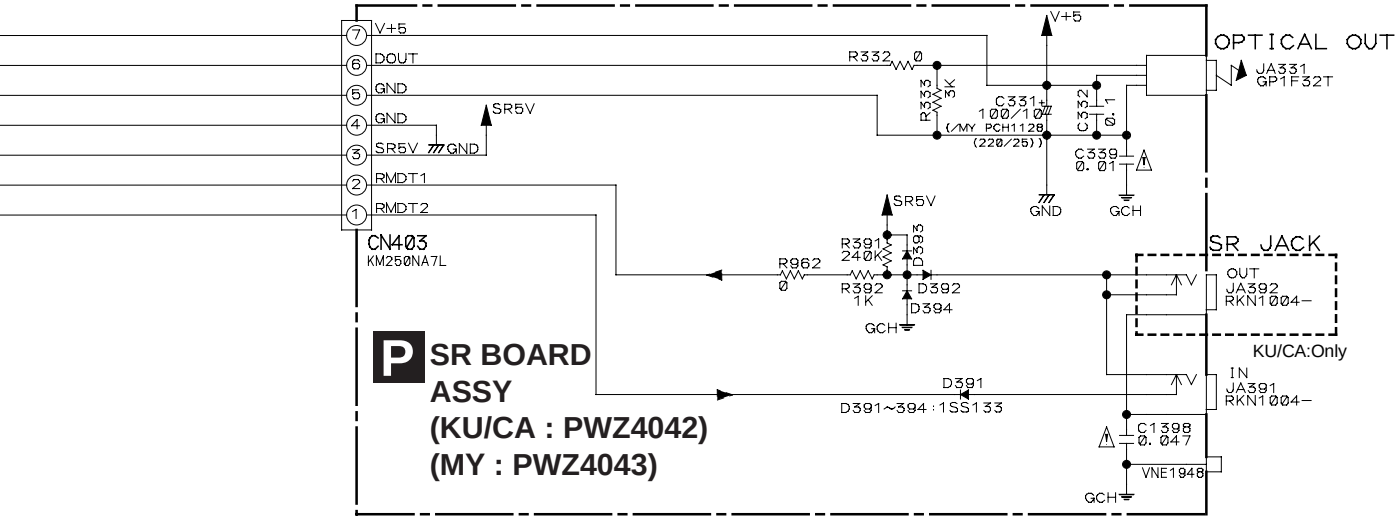

: The power supply is shown with the marked box.

SIGNAL ROUTE
➡ : AUDIO SIGNAL

Notes

Capasitors (Unit:μF)

YB	Ceramic	:CKSQYB
CH	Ceramic	:CCSQCH
SL	Ceramic	:CCCSL
Unmarked	Ceramic	:CKSQYF
MBA	Film	:CQMBA
Unmarked	Electrolysis	:CEAT

Inductors (Unit:μH)

Axitial Type	:LAU

Resistors (Unit:Ω)

Unmarked	:RS1/10S
#	:RD1/4PU
	:RN1/10SE

J Waveforms

Main Board Assy

Note: The encircled numbers denote measuring point in the schematic diagram.

∗1 50T-JUMP: After switching to the pause mode, press the manual search key.
∗2 FOCUS-IN: Press the play key without loading a disc.

2 TP1-Pin 1: PLAY MODE (RFDC)
500mV/div 500nsec/div

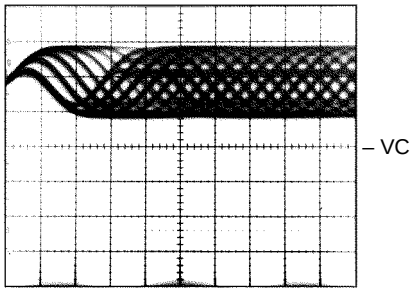

4' TP1-Pin 2: 50T - JUMP (*1) MODE (TRER)
1V/div 1msec/div

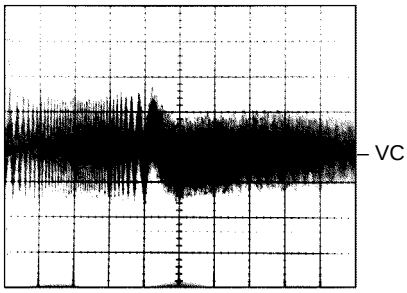

6' IC202-Pin 3: 50T - JUMP (*1) MODE (TRDR)
500mV/div 1msec/div

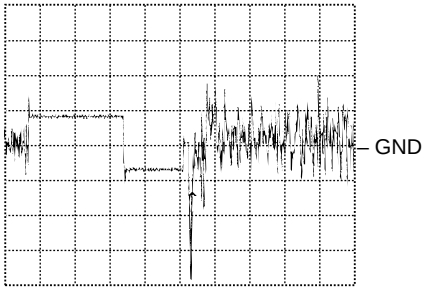

2 TP1-Pin 1: TRACK SEARCH MODE (RFDC)
500 mV/div 200 µsec/div

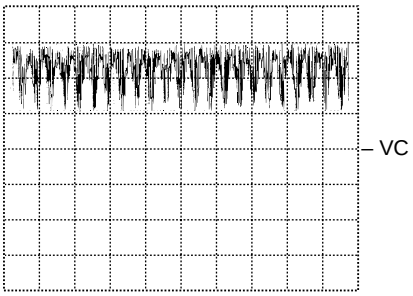

5 IC202-Pin 4: FOCUS-IN (*2) MODE (FODR)
500mV/div 200msec/div

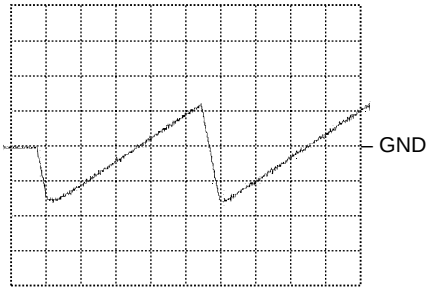

7 IC203-Pin 1: PLAY MODE (SPDR)
1V/div 50msec/div

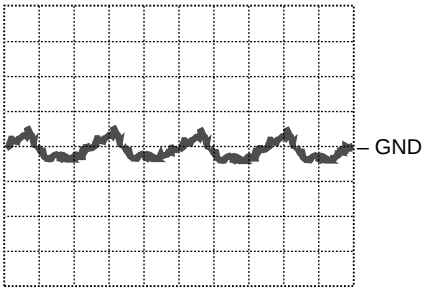

3 TP1-Pin 6: PLAY MODE (FOER)
0.2V/div 1msec/div

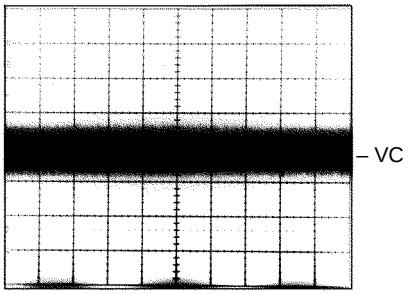

5 IC202-Pin 4: PLAY MODE (FODR)
1V/div 1msec/div

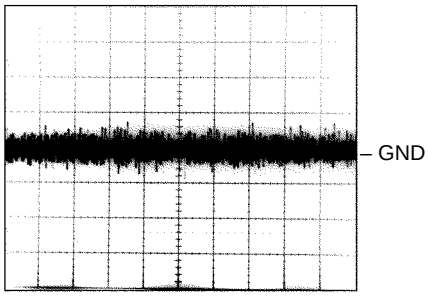

7 IC203-Pin 1: TRACK SEARCH MODE (SPDR)
2V/div 50msec/div

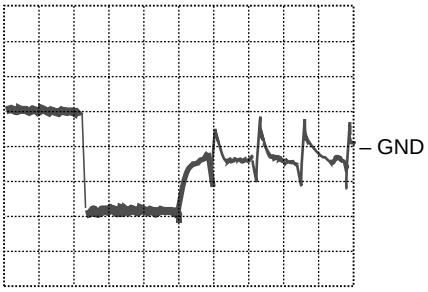

4 TP1-Pin 2: PLAY MODE (TRER)
1V/div 1msec/div

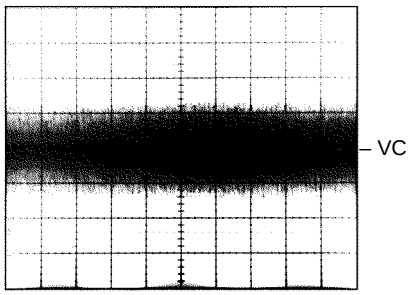

6 IC202-Pin 3: PLAY MODE (TRDR)
500mV/div 1msec/div

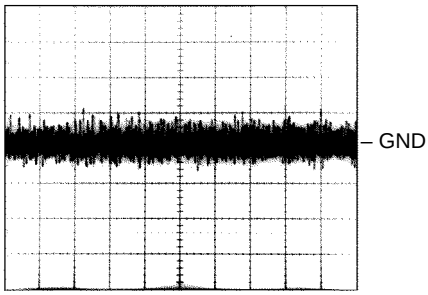

8 IC201-Pin 3: PLAY MODE (SLED)
500mV/div 2sec/div

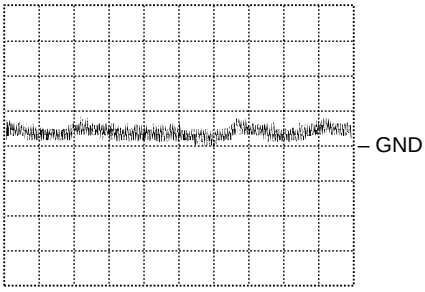

8 IC201-Pin 3: TRACK SEARCH MODE (SLED)
2V/div 200msec/div

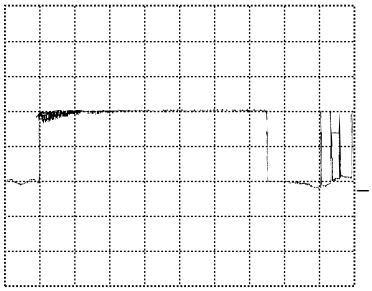

33 IC301-Pin 26 : PLAY MODE (MDP)
2V/div 2 µsec/div

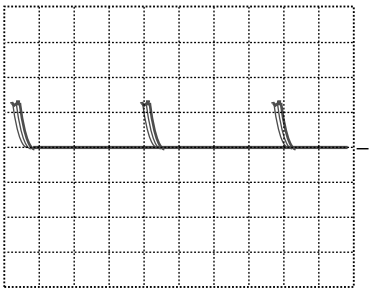

10 IC301-Pin 72 : PLAY MODE (1kHz)
(LOUT 1: KU/CA)
IC401-Pin 16 : (/MY Only)
1V/div 200µsec/div

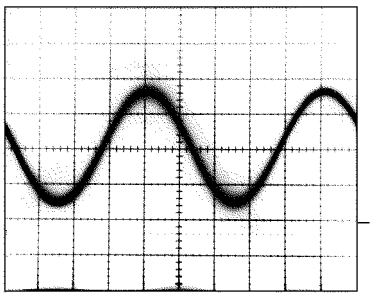

23 TRACK SEARCH MODE
Upper : TP1-Pin 1 (RFDC) 0.5V/div
Lower : IC301-Pin 21 (C.OUT)
2V/div 50 µsec/div

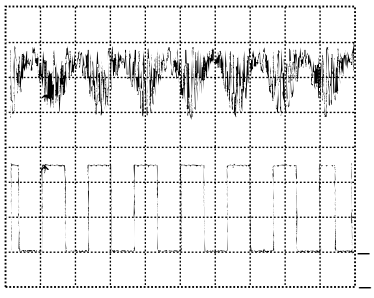

3.7 DISPLAY BOARD, CONTROL BOARD and POWER BOARD ASSYS

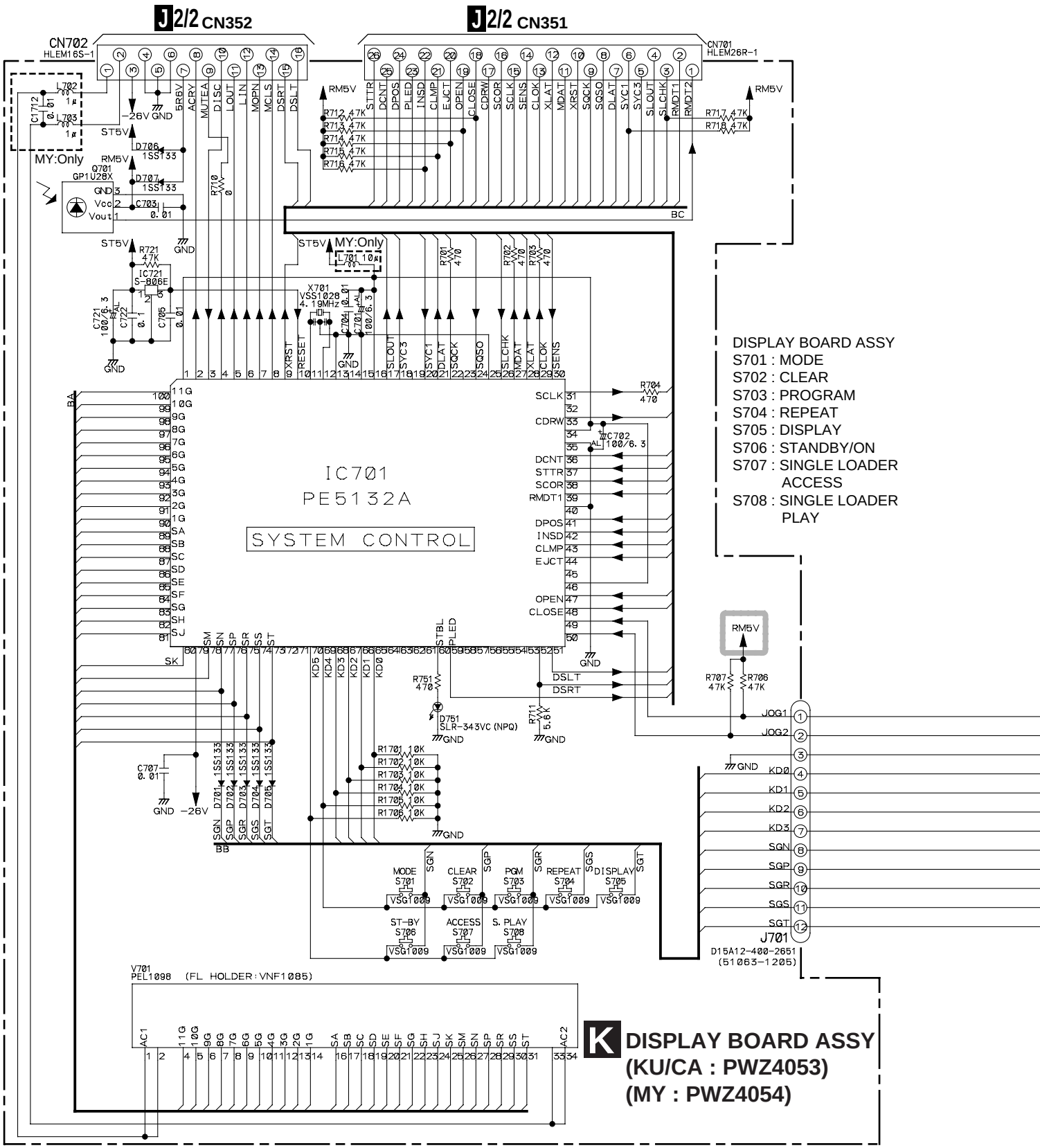

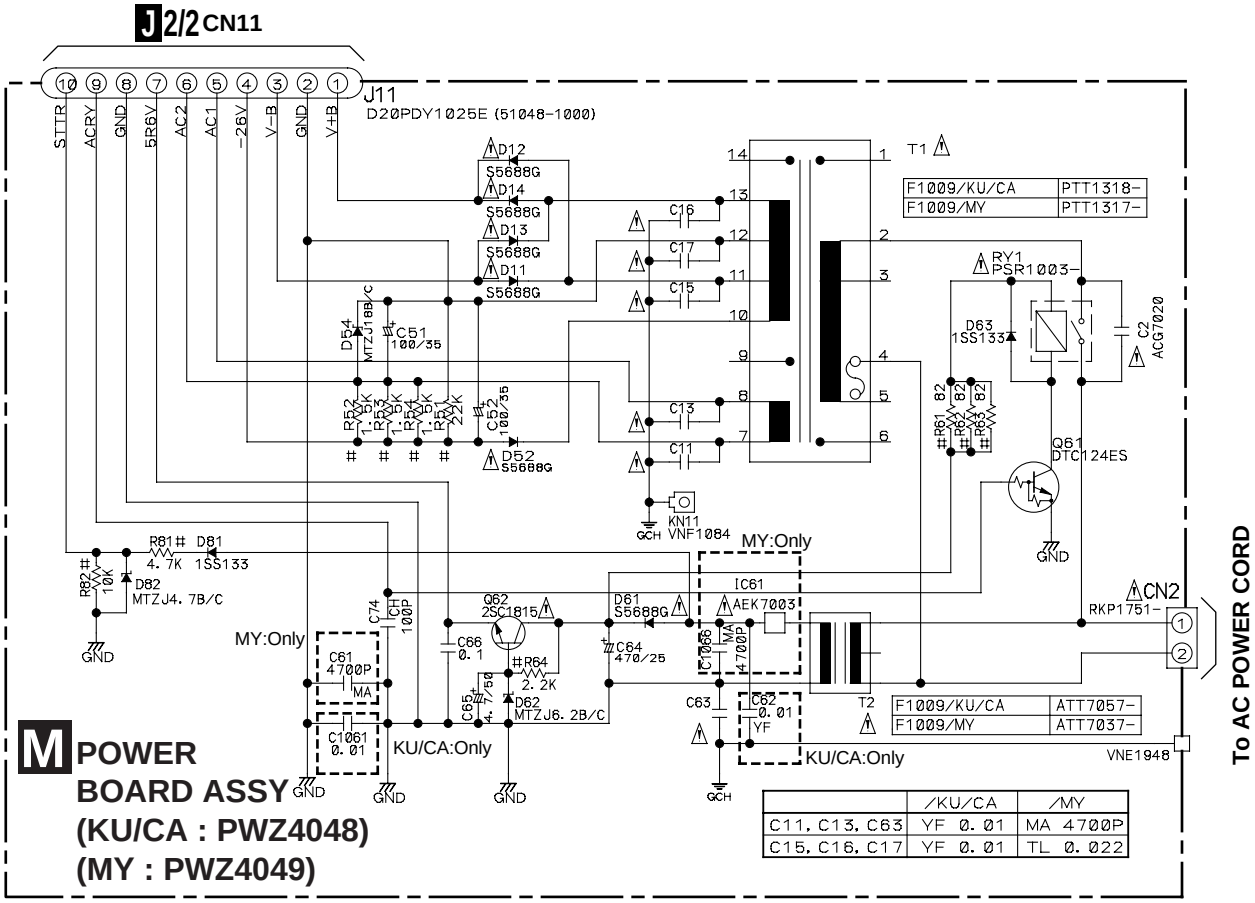

	/KU/CA	/MY
C11, C13, C63	YF 0.01	MA 4700P
C15, C16, C17	YF 0.01	TL 0.022

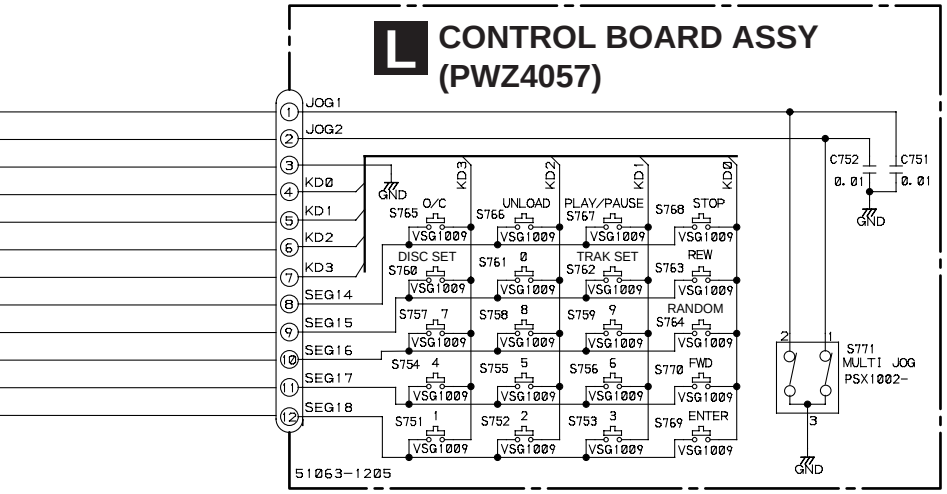

CONTROL BOARD ASSY
S751–S759,S761 : 10 KEY (0–9)
S760 : DISC SET
S762 : TRACK SET
S763 : Track/Manual search (revers direction)
S764 : RANDOM
S765 : OPEN/CLOSE
S766 : UNLOAD
S767 : Play/Pause
S768 : Stop
S769 : ENTER
S770 : Track/Manual search (forward direction)
S771 : Jog dial

: The power supply is shown with the marked box.

CAUTION : FOR CONTINUED PROTECTION AGAINST RISK OF FIRE. REPLACE ONLY WITH SAME TYPE NO. 491.315 FOR IC61,MFD. BY LITTELFUSE INC.

Notes

Capasitors (Unit:μF)

YB	Ceramic	:CKSQYB
CH	Ceramic	:CCSQCH
SL	Ceramic	:CCCSL
YF	Ceramic	:CKCYF
Unmarked	Ceramic	:CKSQYF
MA	Mylar	:CQMA
TL	Film	:CFTLA
AL	Electrolysis	:CEAL
Unmarked	Electrolysis	:CEAT

Inductors (Unit:μH)

Axitial Type :LAU

Resistors (Unit:Ω)

Unmarked	:RS1/10S
#	:RD1/4PU
	:RN1/10SE

4. PCB CONNECTION DIAGRAM

4.1 MECHANISM BOARD, DOOR MOTOR and DOOR SW BOARD ASSYS

SIDE A

NOTE FOR PCB DIAGRAMS:

1. Part numbers in PCB diagrams match those in the schematic diagrams.
2. A comparison between the main parts of PCB and schematic diagrams is shown below.

Symbol in PCB Diagrams	Symbol in Schematic Diagrams	Part Name
B C E	B C E B C E	Transistor
B C E	B C E B C E	Transistor with resistor
D G S	D G S D G S	Field effect transistor
		Resistor array
		3-terminal regulator

3. The parts mounted on this PCB include all necessary parts for several destination.
   For further information for respective destinations, be sure to check with the schematic diagram.

4. Viewpoint of PCB diagrams

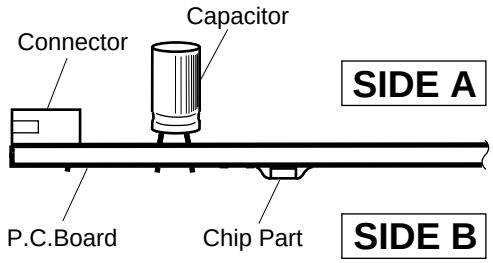

A MECHANISM BOARD ASSY

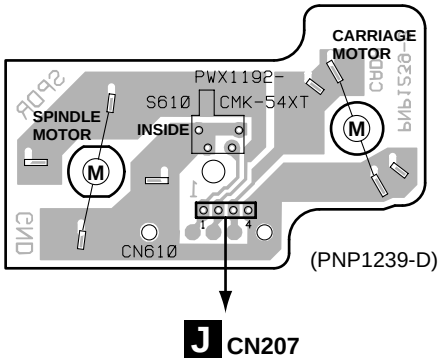

B DOOR MOTOR BOARD ASSY

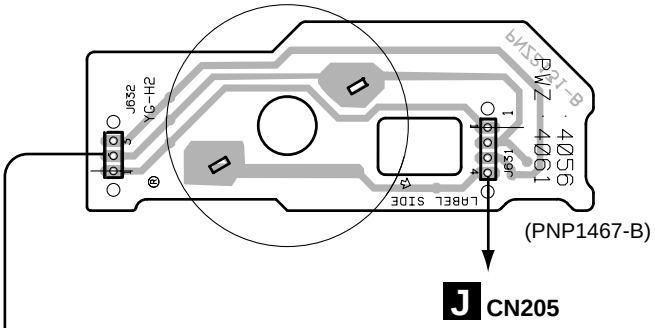

C DOOR SW BOARD ASSY

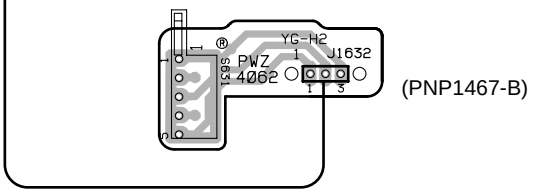

4.2 LOADING SW, LOADING BOARD, SENSOR BOARD, RECIEVE BOARD, RADIATE BOARD, SELECT BOARD and VOLUME BOARD ASSYS

SIDE A

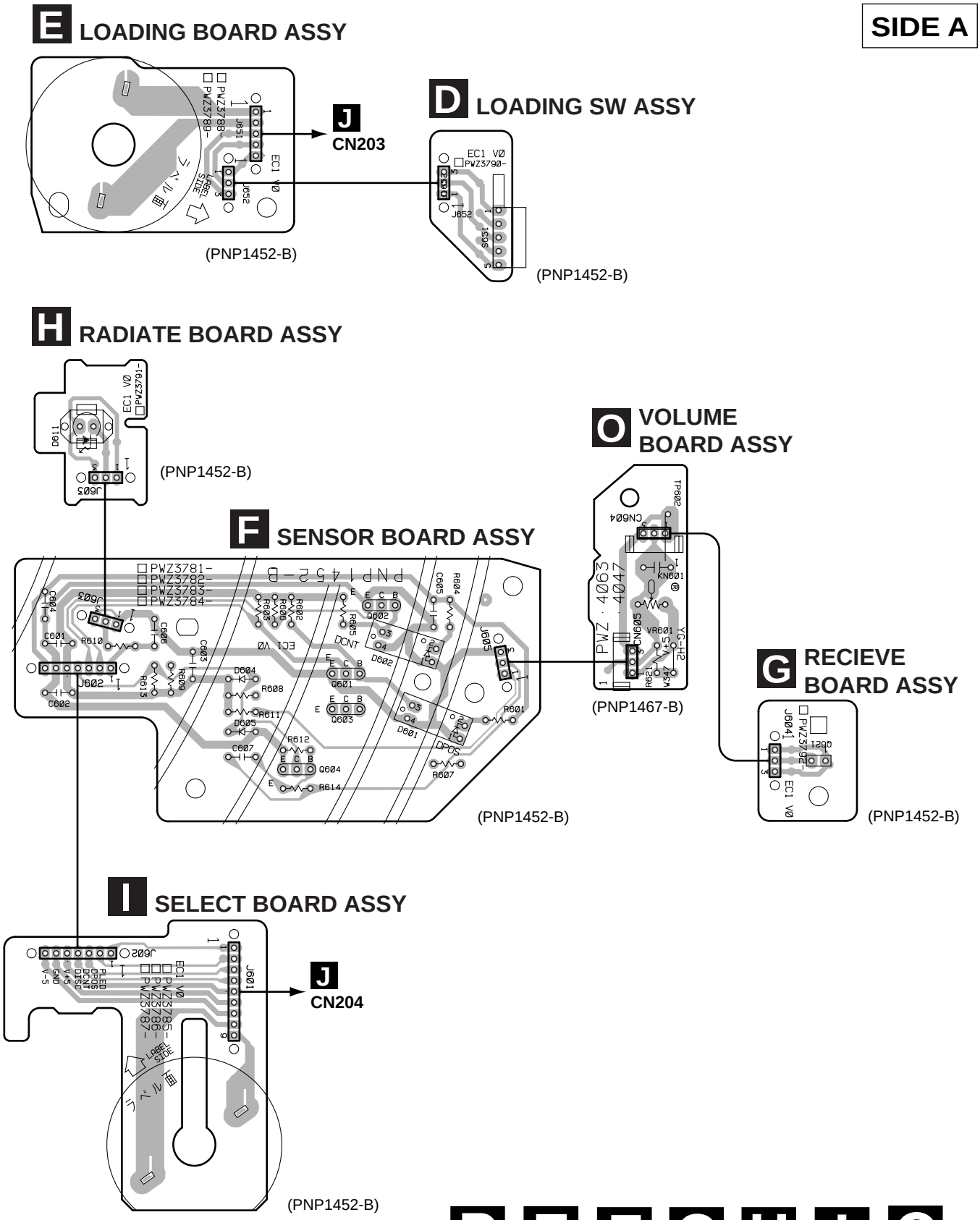

4.3 MAIN BOARD and SR BOARD ASSYS

J MAIN BOARD ASSY

SIDE A

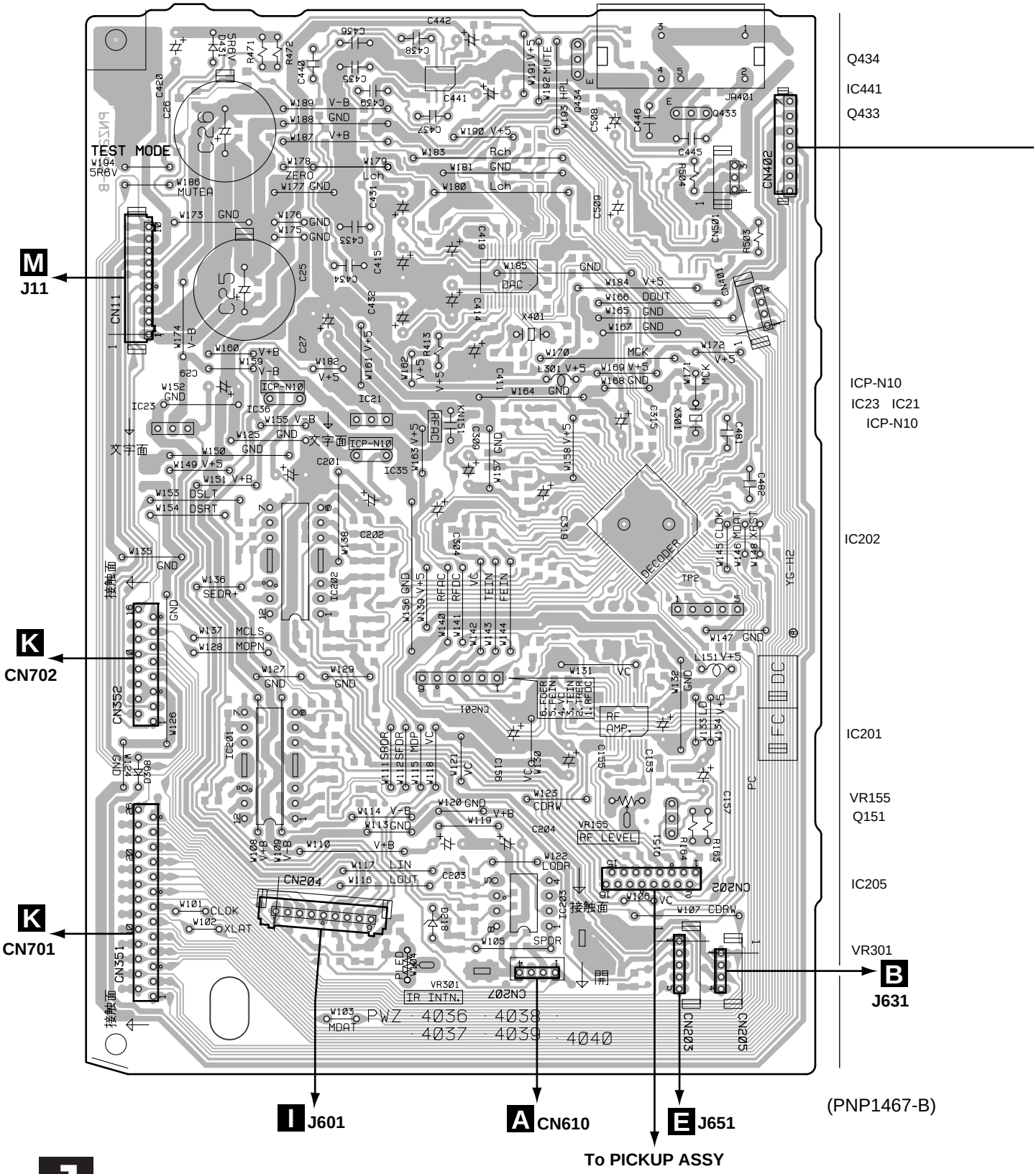

SIDE A

P SR BOARD ASSY

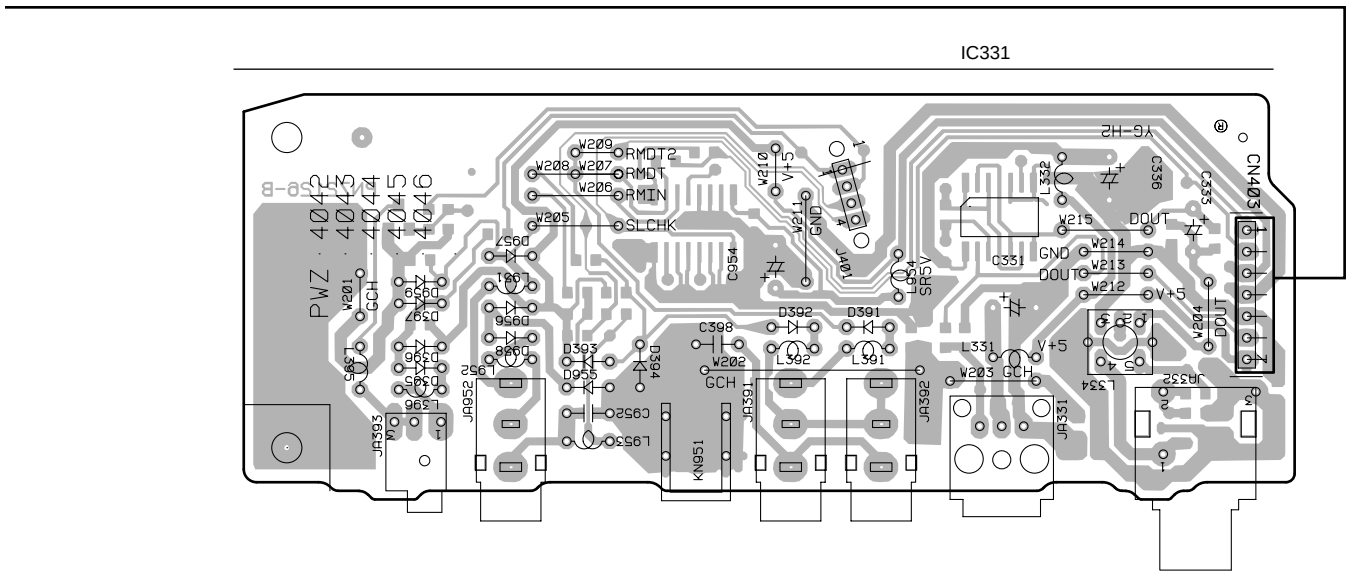

(PNP1467-B)

B)

J MAIN BOARD ASSY

SIDE B

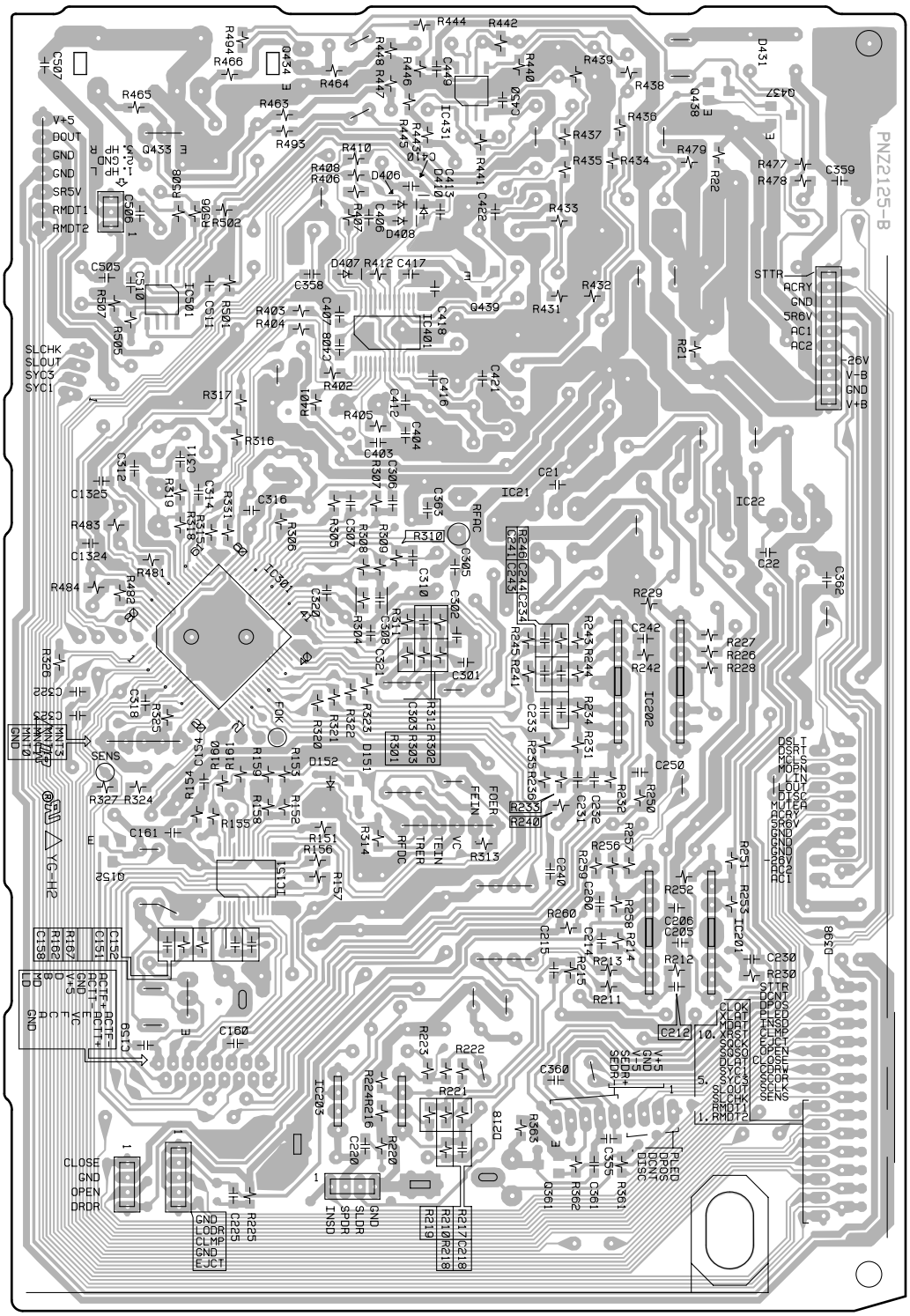

(PNP1467-B)

SIDE B

P SR BOARD ASSY

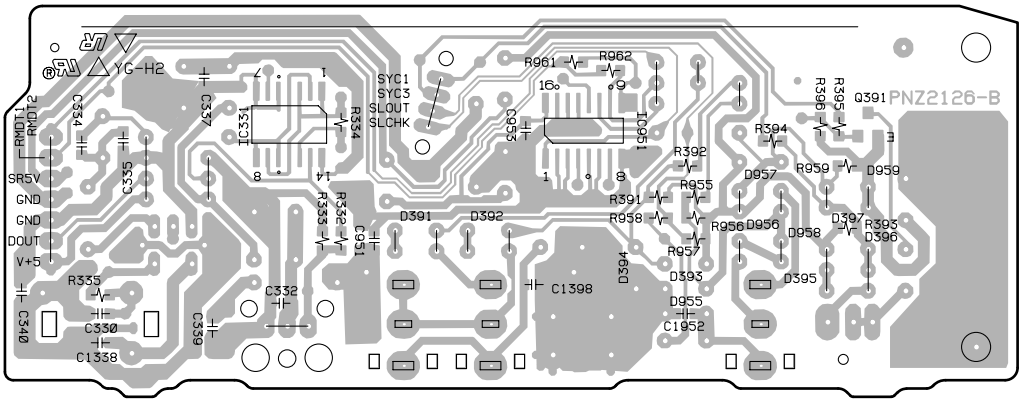

(PNP1467-B)

4.4 DISPLAY BOARD and CONTROL BOARD ASSYS

SIDE A

K DISPLAY BOARD ASSY

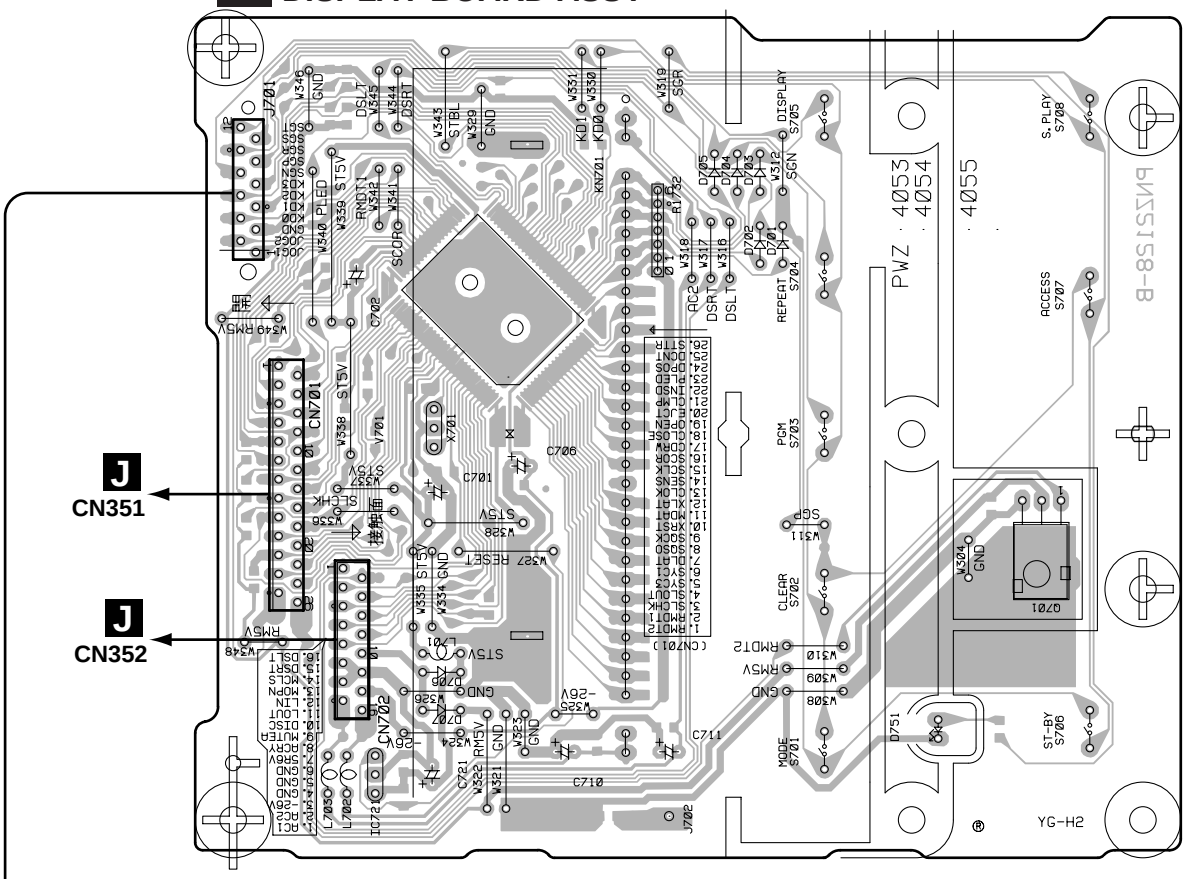

(PNP1467-B)

L CONTROL BOARD ASSY

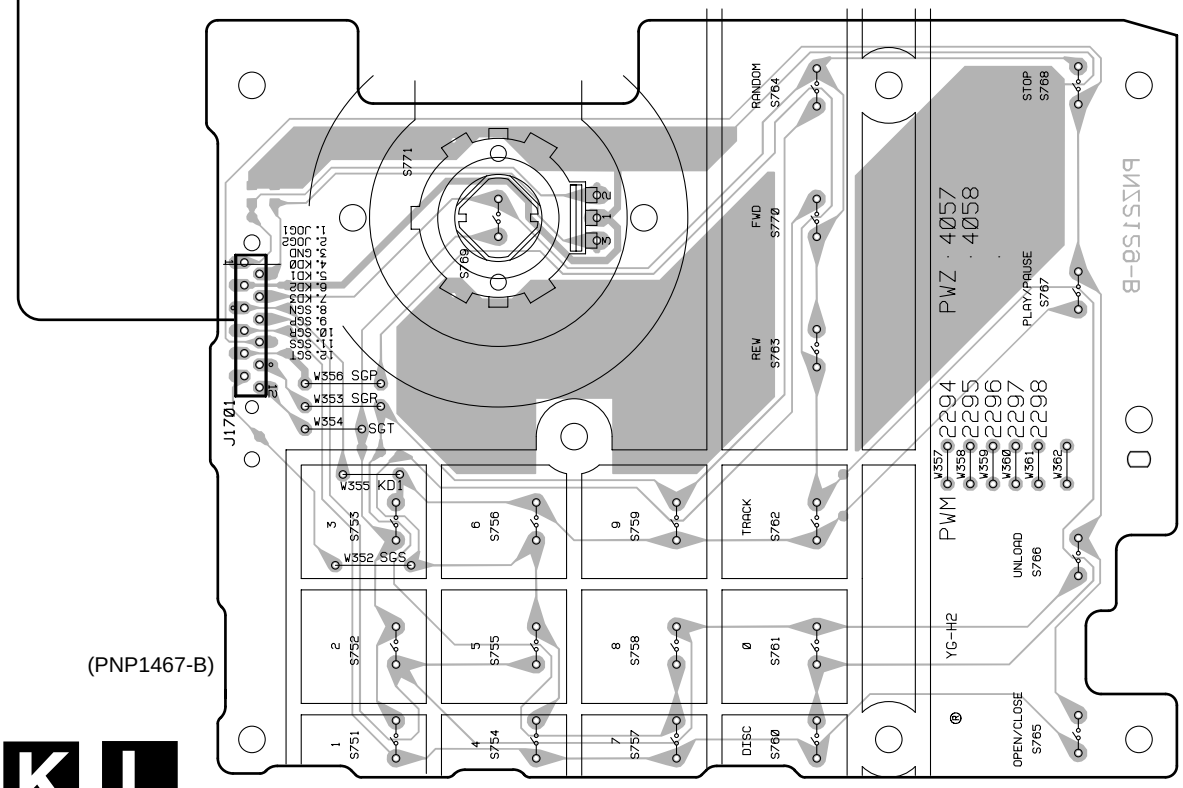

(PNP1467-B)

SIDE B

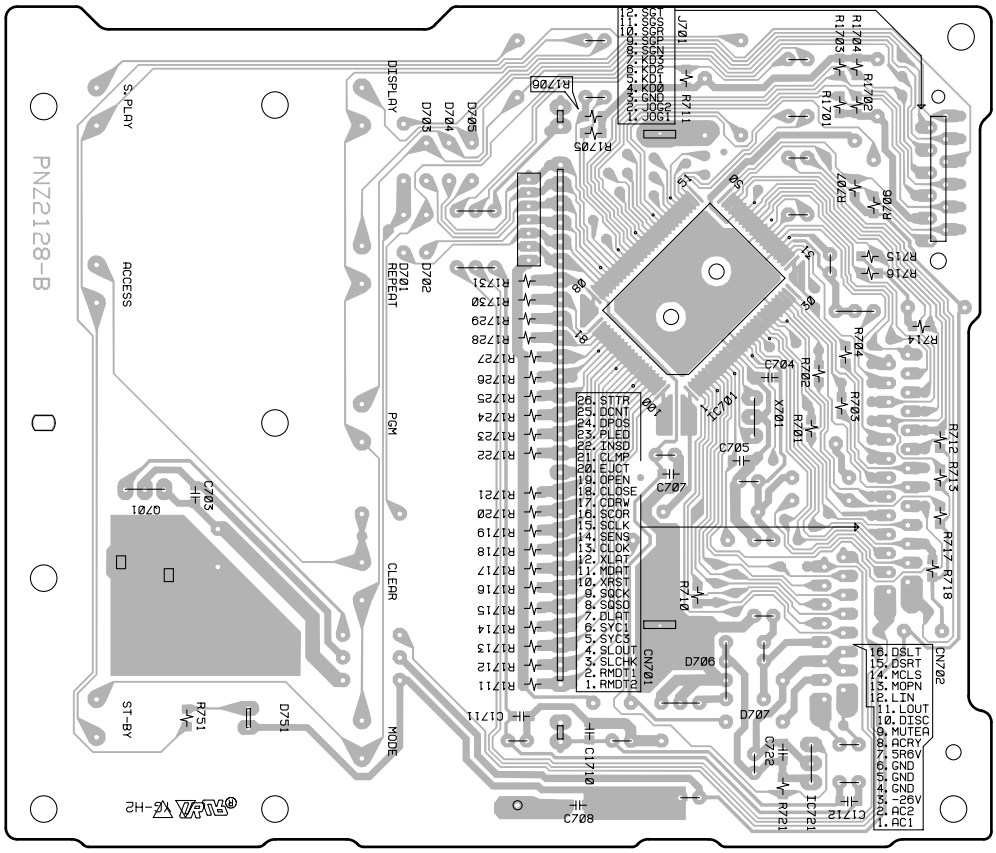
PNZ2128-B
S.PLAY
ACCESS
DISPLAY
REPEAT
PGM
CLEAR
MODE
ST-BY
J701
CN701
CN702
IC701
IC721
X701
Q701
D701
D702
D703
D704
D705
D706
D707
D751
R751
C703
C704
C705
C707
C708
C1710
C1711
C1712
C722
R701
R702
R703
R704
R705
R706
R707
R710
R711
R712
R713
R714
R715
R716
R717
R718
R721
R1701
R1702
R1703
R1704
R1705
R1706
R1711
R1712
R1713
R1714
R1715
R1716
R1717
R1718
R1719
R1720
R1721
R1722
R1723
R1724
R1725
R1726
R1727
R1728
R1729
R1730
R1731
26. STTR
25. DCNT
24. DPOS
23. PLED
22. INSD
21. CLMP
20. EJCT
19. OPEN
18. CLOSE
17. CDRW
16. SCOR
15. SCLK
14. SENS
13. CLOK
12. XLAT
11. MDAT
10. XRST
9. SQCK
8. SQSO
7. DLAT
6. SYC1
5. SYC3
4. SLOUT
3. SLCHK
2. RMDT1
1. RMDT2
16. DSLT
15. DSRT
14. MCLS
13. MOPN
12. LIN
11. LOUT
10. DISC
9. MUTEA
8. ACRY
7. 5R6V
6. GND
5. GND
4. GND
3. -26V
2. AC2
1. AC1

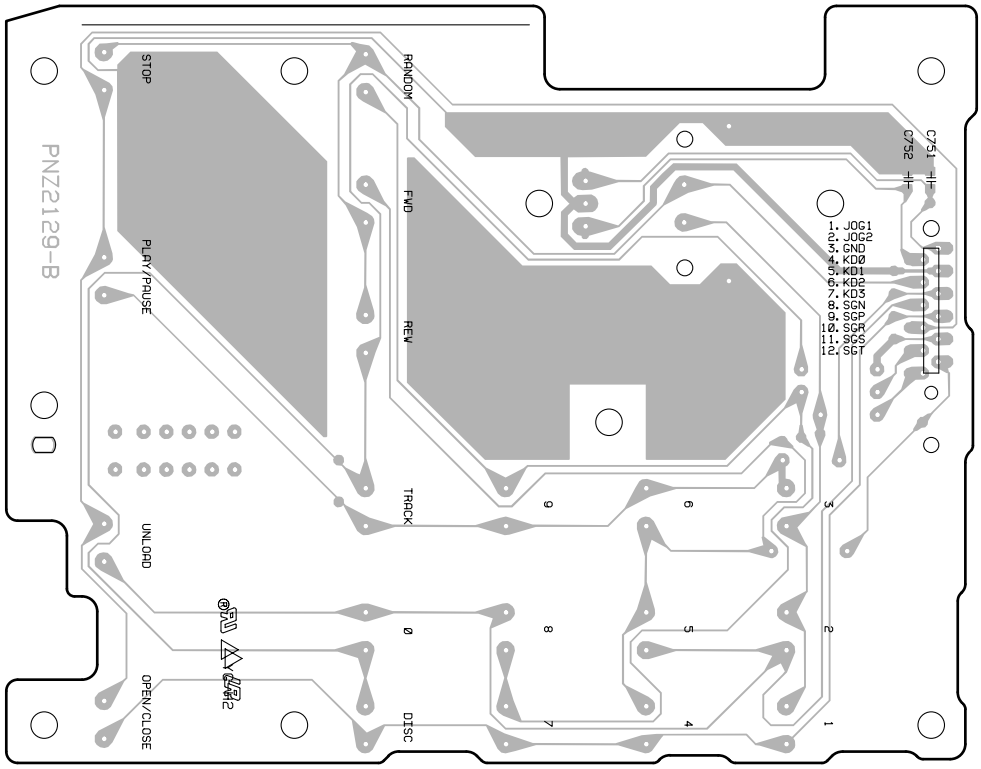
PNZ2129-B
STOP
PLAY/PAUSE
UNLOAD
OPEN/CLOSE
RANDOM
FWD
REW
TRACK
DISC
C751
C752
1. JOG1
2. JOG2
3. GND
4. KD0
5. KD1
6. KD2
7. KD3
8. SGN
9. SGP
10. SGR
11. SGS
12. SGT

4.5 POWER BOARD ASSY

SIDE A

M POWER BOARD ASSY

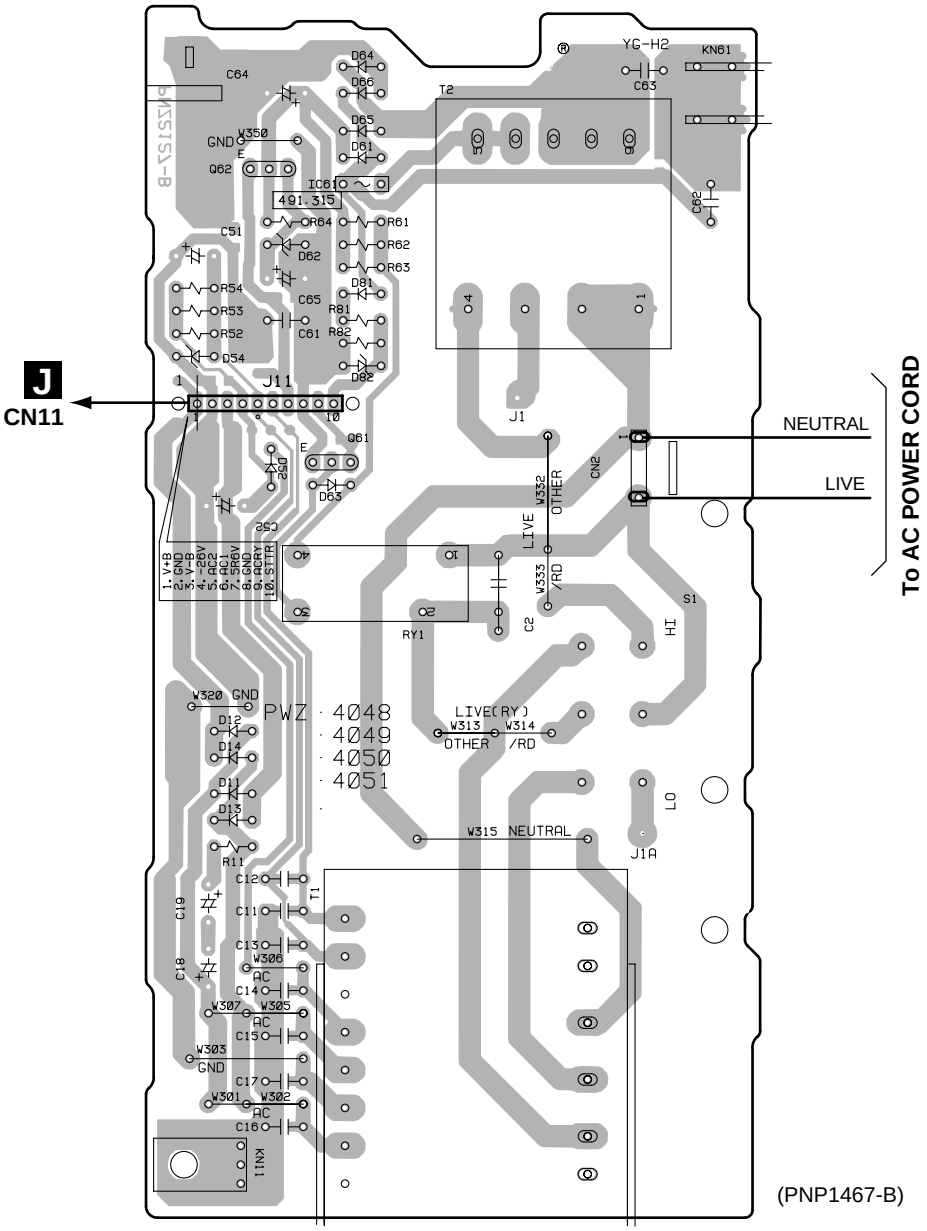

SIDE B

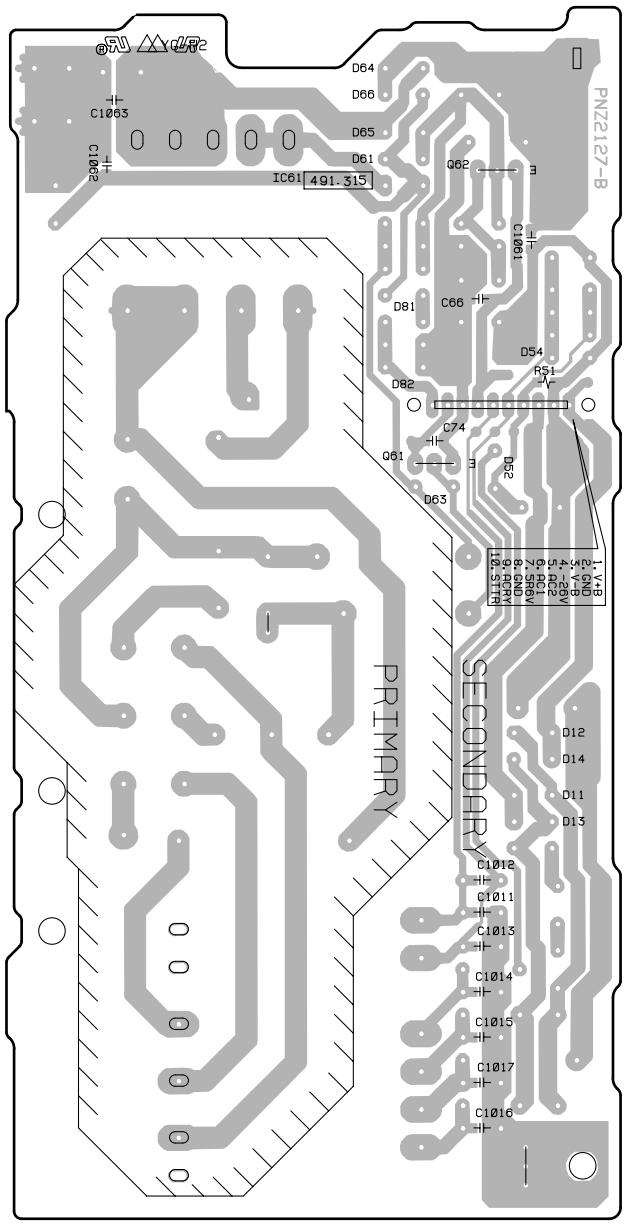

(PNP1467-B)

5. PCB PARTS LIST

NOTES: ● *Parts marked by "NSP" are generally unavailable because they are not in our Master Spare Parts List.*
● *The ⚠ mark found on some component parts indicates the importance of the safety factor of the part. Therefore, when replacing, be sure to use parts of identical designation.*
● *When ordering resistors, first convert resistance values into code form as shown in the following examples.*
Ex.1 When there are 2 effective digits (any digit apart from 0), such as 560 ohm and 47k ohm (tolerance is shown by J=5%, and K=10%).

560 → 56 x 10^1 → 561 ..... RD1/4PU 5 6 1 J
47k → 47 x 10^3 → 473 ..... RD1/4PU 4 7 3 J
0.5 → R50 ..... RN2H R 5 0 K
1 → 1R0 ..... RS1P 1 R 0 K

Ex.2 When there are 3 effective digits (such as in high precision metal film resistors).

5.62k → 562 x 10^1 → 5621 ..... RN1/4PC 5 6 2 1 F

■ LIST OF WHOLE PCB ASSEMBLIES

Mark	Symbol and Description	Part No.		Remarks
		KU/CA type	MY type	
⚠NSP	MOTHER BOARD ASSY	PWM2294	PWM2295	
	├MAIN BOARD ASSY	PWZ4036	PWZ4037	
	├SR BOARD ASSY	PWZ4042	PWZ4043	
	├POWER BOARD ASSY	PWZ4048	PWZ4049	
	├DISPLAY BOARD ASSY	PWZ4053	PWZ4054	
	├CONTROL BOARD ASSY	PWZ4057	PWZ4057	
NSP	├DOOR MOTOR BOARD ASSY	PWZ4061	PWZ4061	
NSP	├DOOR SW BOARD ASSY	PWZ4062	PWZ4062	
NSP	└ VOLUME BOARD ASSY	PWZ4063	PWZ4063	
NSP	MECHANISM BOARD ASSY	PWX1572	PWX1572	
NSP	├ SENSOR BOARD ASSY	PWZ3781	PWZ3781	
NSP	├ SELECT BOARD ASSY	PWZ3785	PWZ3785	
NSP	├ LOADING BOARD ASSY	PWZ3788	PWZ3788	
NSP	├ LOADING SW BOARD ASSY	PWZ3790	PWZ3790	
NSP	├ RADIATE BOARD ASSY	PWZ3791	PWZ3791	
NSP	└ RECIEVE BOARD ASSY	PWZ3792	PWZ3792	
NSP	SERVO MECHANISM ASSY GM	PXA1591	PXA1591	
	└ MECHANISM BOARD ASSY	PWX1192	PWX1192	

■ CONTRAST OF PCB ASSEMBLIES

M POWER BOARD ASSY

PWZ4048 and PWZ4049 are constructed the same except for the following:

Mark	Symbol and Description	Part No.		Remarks
		PWZ4048	PWZ4049	
	C11,C13,C63	CKCYF103Z50	CQMA472J50	
	C15,C16,C17	CKCYF103Z50	CFTLA223J50	
	C61,C1066	Not used	CQMA472J50	
	C62,C1061	CKCYF103Z50	Not used	
⚠	IC61	Not used	AEK7003	
⚠	T2	ATT7057	ATT7037	
⚠	T1	PTT1318	PTT1317	

P SR BOARD ASSY

PWZ4042 and PWZ4043 are constructed the same except for the following:

Mark	Symbol and Description	Part No.		Remarks
		PWZ4042	PWZ4043	
	C331	CEAT101M10	PCH1128	PCH1128 : 220µF/25V
	JA392	RKN1004	Not used	

K DISPLAY BOARD ASSY

PWZ4053 and PWZ4054 are constructed the same except for the following:

Mark	Symbol and Description	Part No.		Remarks
		PWZ4053	PWZ4054	
	C1712	Not used	CKSQYF103Z50	
	L701	Not used	LAU100J	
	L702, L703	Not used	LAU1R0J	

J MAIN BOARD ASSY

PWZ4036 and PWZ4037 are constructed the same except for the following:

Mark	Symbol and Description	Part No.		Remarks
		PWZ4036	PWZ4037	
	IC401	Not used	PE8001A	
	Q439	Not used	DTC124EK	
	D406,D407,D408,D410	Not used	1SS355	
	L1413	Not used	LAU100J	
	C27,C319	CEAT101M10	PCH1128	PCH1128 : 220µF/25V
	C153	CEAT101M50	PCH1128	PCH1128 : 220µF/25V
	C155,C156	CEAT101M50	PCH1126	PCH1126 : 100µF/50V
	C157	CEAT101M10	PCH1126	PCH1126 : 100µF/50V
	C304	CEAT101M50	PCH1126	PCH1126 : 100µF/50V
	C311,C312	CCSQCH150J50	Not used	
	C315	CEAT101M50	PCH1128	PCH1128 : 220µF/25V
	C403	Not used	CCSQCH240J50	
	C404	Not used	CCSQCH300J50	
	C406	Not used	CKSQYB102K50	
	C410,C412,C413,C416	Not used	CKSQYF103Z50	
	C417,C418,C421,C422	Not used	CKSQYF103Z50	
	C411,C419	Not used	PCH1126	PCH1126 : 100µF/50V
	C414,C415	Not used	PCH1127	PCH1127 : 4.7µF/50V
	C431,C432	Not used	PCH1124	PCH1124 : 47µF/50V
	C433- C436,C439,C440	Not used	CQMBA152J50	
	C437,C438	CCCSL121J50	Not used	
	C441,C442	CEAT220M25	PCH1124	PCH1124 : 47µF/50V
	C481,C482	CCCSL390J50	Not used	
	R315- R317,R402- R404,R406	Not used	RS1/10S221J	
	R318	RS1/10S331J	Not used	
	R319	RS1/10S105J	Not used	
	R401	Not used	RS1/10S471J	
	R405	Not used	RS1/10S331J	
	R410	Not used	RS1/10S0R0J	
	R412	Not used	RS1/10S103J	
	R431,R432	Not used	RS1/10S223J	
	R433,R434	Not used	RS1/10S102J	
	R435,R436	Not used	RS1/10S182J	
	R437,R438	RN1/10SE5601D	RN1/10SE1801D	
	R439,R440,R443,R444	RN1/10SE1002D	Not used	
	R477	Not used	RS1/10S473J	
	R479	RS1/10S0R0J	Not used	
	R481- R484	RN1/10SE2202D	Not used	
	X301 (16.9344MHz)	PSS1008	Not used	
	X401 (16.9344MHz)	Not used	PSS1008	

■ PARTS LIST FOR PD-F1009/KU/CA

Mark	No.	Description	Part No.

A MECHANISM BOARD ASSY

SWITCHES AND RELAYS

	S610		DSG1016

OTHERS

	CN610		173979-4

F SENSOR BOARD ASSY

SEMICONDUCTORS

	Q601	TRANSISTOR	DTC124ES
	Q602	TRANSISTOR	DTC124ES
	Q604	TRANSISTOR	2SC1740S
	D601	PHOTO INTERRUPTOR	GP1S58V
	D602	PHOTO INTERRUPTOR	GP1S58V

RESISTORS

	Other Resistors		RD1/4PU□□□J

OTHERS

		3PCABLE HOLDER	51048-0300
		7P CABLE HOLDER	51048-0700
	J602	JUMPER WIRE	D20PDD0725E
	J603	3P JUMPER WIRE	D20PDD0310E
	J605	3P JUMPER WIRE	D20PDY0310E

I SELECT BOARD ASSY

OTHERS

		7P CABLE HOLDER	51048-0700
		9P CABLE HOLDER	51048-0900
	J601	JUMPERWIRE	D20PDY0930G

E LOARDING BOARD ASSY

OTHERS

		3P CABLE HOLDER	51048-0300
		5P CABLE HOLDER	51048-0500
	J651	JUMPER WIRE	D20PDY0530E
	J652	3P JUMPER WIRE	D20PDD0310E

D LOARDING SW BOARD ASSY

OTHERS

		3P CABLE HOLDER	51048-0300
		REAF SWITCH	VSK1011

H RADIATE BOARD ASSY

SEMICONDUCTORS

	D611	DIODE	GL381J

Mark	No.	Description	Part No.

OTHERS

		3P CABLE HOLDER	51048-0300
		L.E.D.HOLDER	RNK1795

G RECIEVE BOARD ASSY

SEMICONDUCTORS

	Q621	PHOTO TRANSISTOR	PT381FBC

OTHERS

		3P CABLE HOLDER	51048-0300
	J604	JUMPER WIRE	D20PDY0315E

J MAIN BOARD ASSY

SEMICONDUCTORS

	IC151	RF AMP IC	CXA2570N
⚠	IC201	POWER OP-AMP IC	LA6520
⚠	IC202	POWER OP-AMP IC	LA6520
⚠	IC203	POWER OP-AMP IC	LA6517
⚠	IC21	REGULATOR IC	BA05T
⚠	IC23	REGULATOR IC	NJM79M05FA
	IC301	SERVO IC	CXD2587Q
⚠	IC35	IC PROTECTOR	ICP-N10
⚠	IC36	IC PROTECTOR	ICP-N10
	IC431	IC	NJM4558MD
	Q151	TRANSISTOR	2SA854S
	Q152	CHIP DIGITAL TRANS.	DTA124EK
	Q361	CHIP TRANSISTOR	2SC2412K
	Q433	TRANSISTOR	2SD2144S
	Q434	TRANSISTOR	2SD2144S
	Q437	DIGITAL TRANSISTOR	DTC124EK
	Q438	CHIP DIGITAL TRANS.	DTA124EK
	D151	CHIP DIODE	DA204K
	D152	CHIP DIODE	RB501V-40
	D218	ZENNER DIODE	MTZJ6.2B
	D398	DIODE	1SS133

CAPACITORS

	C1324	CERAMIC CAPACITOR	CKSQYF104Z25
	C1325	CERAMIC CAPACITOR	CKSQYF104Z25
	C151	CERAMIC CAPACITOR	CKSQYB103K50
	C153	ELECT. CAPACITOR	CEAT101M50
	C154	CERAMIC CAPACITOR	CKSQYF104Z25
	C155	ELECT. CAPACITOR	CEAT101M50
	C156	ELECT. CAPACITOR	CEAT101M50
	C157	ELECT. CAPACITOR	CEAT101M10
	C158	CHIP CAPACITOR	CKSQYF103Z50
	C159	CERAMIC CAPACITOR	CKSQYB152K50
	C201	ELECT. CAPACITOR	CEAT470M16
	C202	ELECT. CAPACITOR	CEAT470M16
	C203	ELECT. CAPACITOR	CEAT470M16
	C204	ELECT. CAPACITOR	CEAT470M16
	C205	CERAMIC CAPACITOR	CKSQYF104Z25
	C206	CERAMIC CAPACITOR	CKSQYF104Z25

Mark	No.	Description	Part No.
	C21	CERAMIC CAPACITOR	CKSQYF104Z25
	C212	CHIP CAPACITOR	CKSQYB682K50
	C214	CHIP CAPACITOR	CKSQYB682K50
	C215	CERAMIC CAPACITOR	CKSQYB103K50
	C218	CERAMIC CAPACITOR	CKSQYB332K50
	C220	CERAMIC CAPACITOR	CKSQYB103K50
	C225	CERAMIC CAPACITOR	CKSQYB103K50
	C230	CERAMIC CAPACITOR	CKSQYB104K25
	C231	CHIP CAPACITOR	CKSQYB102K50
	C232	CERAMIC CAPACITOR	CKSQYB471K50
	C233	CHIP CAPACITOR	CKSQYB102K50
	C234	CERAMIC CAPACITOR	CKSQYB471K50
	C240	CERAMIC CAPACITOR	CKSQYB103K50
	C241	CERAMIC CAPACITOR	CKSQYB152K50
	C242	CERAMIC CAPACITOR	CKSQYB681K50
	C243	CERAMIC CAPACITOR	CKSQYB152K50
	C244	CERAMIC CAPACITOR	CKSQYB681K50
	C25	CAPACITOR (4700μ/16v)	PCH1135
	C250	CERAMIC CAPACITOR	CKSQYB103K50
	C26	CAPACITOR (2200μ/16v)	PCH1134
	C260	CERAMIC CAPACITOR	CKSQYB104K25
	C27	ELECT. CAPACITOR	CEAT101M10
	C29	ELECT. CAPACITOR	CEAT101M10
	C301	CHIP CERAMIC C.	CCSQCH221J50
	C302	CHIP CAPACITOR	CCSQCH681J50
	C303	CERAMIC CAPACITOR	CKSQYB104K25
	C304	ELECT. CAPACITOR	CEAT101M50
	C305	CERAMIC CAPACITOR	CKSQYB822K50
	C306	CERAMIC CAPACITOR	CKSQYB152K50
	C307	CERAMIC CAPACITOR	CKSQYB473K25
	C308	CERAMIC CAPACITOR	CKSQYB103K50
	C309	ELECT. CAPACITOR	CEATR47M50
	C310	CHIP CERAMIC C.	CCSQCH221J50
	C311	CHIP CERAMIC C.	CCSQCH150J50
	C312	CHIP CERAMIC C.	CCSQCH150J50
	C314	CERAMIC CAPACITOR	CKSQYF104Z25
	C315	ELECT. CAPACITOR	CEAT101M50
	C316	CERAMIC CAPACITOR	CKSQYF104Z25
	C318	CERAMIC CAPACITOR	CKSQYF104Z25
	C319	ELECT. CAPACITOR	CEAT101M10
	C320	CERAMIC CAPACITOR	CKSQYF104Z25
	C321	CERAMIC CAPACITOR	CKSQYF104Z25
	C322	CHIP CAPACITOR	CKSQYF103Z50
	C323	CHIP CAPACITOR	CCSQCH101J50
	C358	CHIP CAPACITOR	CKSQYF103Z50
	C359	CERAMIC CAPACITOR	CKSQYF473Z50
	C361	CHIP CAPACITOR	CCSQCH101J50
	C362	CHIP CAPACITOR	CKSQYF103Z50
	C363	CHIP CAPACITOR	CKSQYF103Z50
	C407	CHIP CAPACITOR	CCSQCH101J50
	C408	CHIP CAPACITOR	CCSQCH101J50
	C437	CERAMIC CAPACITOR	CCCSL121J50
	C438	CERAMIC CAPACITOR	CCCSL121J50
	C441	ELECT. CAPACITOR	CEAT220M25
	C442	ELECT. CAPACITOR	CEAT220M25

Mark	No.	Description	Part No.
	C445	FILM CAPACITOR	CQMBA102J50
	C446	FILM CAPACITOR	CQMBA102J50
	C449	CERAMIC CAPACITOR	CKSQYF104Z25
	C450	CERAMIC CAPACITOR	CKSQYF104Z25
	C481	CERAMIC CAPACITOR	CCCSL390J50
	C482	CERAMIC CAPACITOR	CCCSL390J50

RESISTORS

	R163	CARBON FILM RESISTOR	RD1/4PU470J
	R164	CARBON FILM RESISTOR	RD1/4PU470J
	R210	METAL FILM RESISTOR	RN1/10SE1002D
	R216	METAL FILM RESISTOR	RN1/10SE1003D
	R217	METAL FILM RESISTOR	RN1/10SE3602D
	R218	METAL FILM RESISTOR	RN1/10SE1003D
	R219	METAL FILM RESISTOR	RN1/10SE4702D
	R437	METAL FILM RESISTOR	RN1/10SE5601D
	R438	METAL FILM RESISTOR	RN1/10SE5601D
	R439	METAL FILM RESISTOR	RN1/10SE1002D
	R440	METAL FILM RESISTOR	RN1/10SE1002D
	R441	METAL FILM RESISTOR	RN1/10SE1002D
	R442	METAL FILM RESISTOR	RN1/10SE1002D
	R443	METAL FILM RESISTOR	RN1/10SE1002D
	R444	METAL FILM RESISTOR	RN1/10SE1002D
	R445	METAL FILM RESISTOR	RN1/10SE1002D
	R446	METAL FILM RESISTOR	RN1/10SE1002D
	R471	CARBON FILM RESISTOR	RD1/4PU332J
	R472	CARBON FILM RESISTOR	RD1/4PU332J
	R481	METAL FILM RESISTOR	RN1/10SE2202D
	R482	METAL FILM RESISTOR	RN1/10SE2202D
	R483	METAL FILM RESISTOR	RN1/10SE2202D
	R484	METAL FILM RESISTOR	RN1/10SE2202D
	R1102	CARBON FILM RESISTOR	RD1/4PU221J
	VR155	(10kΩ)	VCP1156
	Other Resistors		RS1/10S□□□J

OTHERS

	CN11	10PJUMPER	52147-1010
	CN201	TOP POST (6P)	B6P-SHF-1AA
	CN202	CONNECTOR	SLW16S-1C7
	CN203	5P JUMPER	52147-0510
	CN204	9P JUMPER	52147-0910
	CN205	4P JUMPER	52147-0410
	CN207	MT 4P CONNECTOR	173981-4
	CN351	CONNECTOR	HLEM26S-1
	CN352	CONNECTOR	HLEM16S-1
	JA401	JACK	DKB1031
	KN151	JUMPER TERMINAL	PKX1001
	X301	XTAL RES (OSC) (16.9344MHz)	PSS1008
		PCB BINDER	VEF1040

P SR BOARD ASSY

SEMICONDUCTORS

	D391	DIODE	1SS133
	D392	DIODE	1SS133

Mark	No.	Description	Part No.
	D393	DIODE	1SS133
	D394	DIODE	1SS133

CAPACITORS

	C1398	CERAMIC CAPACITOR	CKSQYF473Z50
	C331	ELECT. CAPACITOR	CEAT101M10
	C332	CERAMIC CAPACITOR	CKSQYF104Z25
	C339	CHIP CAPACITOR	CKSQYF103Z50

RESISTORS

	Other Resistors		RS1/10S□□□J

OTHERS

	CN403	7-P PLUG	KM250NA7L
	JA331	OPTICAL LINK OUT	GP1F32T
	JA391	JACK	RKN1004
	JA392	JACK	RKN1004
		SCREW PLATE	VNE1948

M POWER BOARD ASSY

SEMICONDUCTORS

	Q61	TRANSISTOR	DTC124ES
⚠	Q62	TRANSISTOR	2SC1815
⚠	D11	DIODE	S5688G
⚠	D12	DIODE	S5688G
⚠	D13	DIODE	S5688G
⚠	D14	DIODE	S5688G
⚠	D52	DIODE	S5688G
	D54	ZENNER DIODE	MTZJ18B
⚠	D61	DIODE	S5688G
	D62	ZENNER DIODE	MTZJ6.2B
	D63	DIODE	1SS133
	D81	DIODE	1SS133
	D82	ZENER DIODE	MTZJ4.7B

SWITCHES AND RELAYS

⚠	RY1	RELAY	PSR1003

CAPACITORS

	C1061	CHIP CAPACITOR	CKSQYF103Z50
	C11	CERAMIC CAPACITOR	CKCYF103Z50
	C13	CERAMIC CAPACITOR	CKCYF103Z50
	C15	CERAMIC CAPACITOR	CKCYF103Z50
	C16	CERAMIC CAPACITOR	CKCYF103Z50
	C17	CERAMIC CAPACITOR	CKCYF103Z50
⚠	C2	CKA (10000P/AC250V)	ACG7020
	C51	ELECT. CAPACITOR	CEAT101M35
	C52	ELECT. CAPACITOR	CEAT101M35
	C62	CERAMIC CAPACITOR	CKCYF103Z50
	C63	CERAMIC CAPACITOR	CKCYF103Z50
	C64	ELECT. CAPACITOR	CEAT471M25
	C65	ELECT. CAPACITOR	CEAT4R7M50
	C66	CERAMIC CAPACITOR	CKSQYF104Z25
	C74	CHIP CAPACITOR	CCSQCH101J50

RESISTORS

	R51	CHIP RESISTOR	RS1/10S223J
	Other Resistors		RD1/4PU□□□J

Mark	No.	Description	Part No.

OTHERS

		10P CABLE HOLDER	51048-1000
⚠	T2	STANDBY TRANSFORMER	ATT7057
	J11	2mm 10P WIRE	D20PDY1025E
⚠	T1	POWER TRANSFOMER	PTT1318
⚠	CN2	AC CODE SOCKET	RKP1751
		PCB BINDER	VEF1040
		SCREW PLATE	VNE1948
	KN11	EARTH METAL FITTING	VNF1084

K DISPLAY BOARD ASSY

SEMICONDUCTORS

	IC701	MICROCOMPUTER IC	PE5132B
	IC721	RESET IC	S-806E
	D701	DIODE	1SS133
	D702	DIODE	1SS133
	D703	DIODE	1SS133
	D704	DIODE	1SS133
	D705	DIODE	1SS133
	D706	DIODE	1SS133
	D707	DIODE	1SS133
	D751	LED(RED)	SLR-343VC(NPQ)

SWITCHES AND RELAYS

	S701	SWITCH	VSG1009
	S702	SWITCH	VSG1009
	S703	SWITCH	VSG1009
	S704	SWITCH	VSG1009
	S705	SWITCH	VSG1009
	S706	SWITCH	VSG1009
	S707	SWITCH	VSG1009
	S708	SWITCH	VSG1009

CAPACITORS

	C701	ELECTR. CAPACITOR	CEAL101M6R3
	C702	ELECTR. CAPACITOR	CEAL101M6R3
	C703	CHIP CAPACITOR	CKSQYF103Z50
	C704	CHIP CAPACITOR	CKSQYF103Z50
	C705	CHIP CAPACITOR	CKSQYF103Z50
	C707	CHIP CAPACITOR	CKSQYF103Z50
	C721	ELECTR. CAPACITOR	CEAL101M6R3
	C722	CERAMIC CAPACITOR	CKSQYF104Z25

RESISTORS

	Other Resistors		RS1/10S□□□J

OTHERS

		CABLE HOLDER(12P)	51063-1205
	J701	JUMPER WIRE	D15A12-400-2651
		REMOTE RECEIVER UNIT	GP1U28X
	CN701	CONNECTOR	HLEM26R-1
	CN702	CONNECTOR	HLEM16S-1
	V701	FL INDICATOR TUBE	PEL1098
		FL HOLDER(FE)	VNF1085
	X701	CERAMIC RESONATOR (4.19MHz)	VSS1028

Mark	No.	Description	Part No.

L CONTROL BOARD ASSY

SWITCHES AND RELAYS

S751	SWITCH	VSG1009
S752	SWITCH	VSG1009
S753	SWITCH	VSG1009
S754	SWITCH	VSG1009
S755	SWITCH	VSG1009
S756	SWITCH	VSG1009
S757	SWITCH	VSG1009
S758	SWITCH	VSG1009
S759	SWITCH	VSG1009
S760	SWITCH	VSG1009
S761	SWITCH	VSG1009
S762	SWITCH	VSG1009
S763	SWITCH	VSG1009
S764	SWITCH	VSG1009
S765	SWITCH	VSG1009
S766	SWITCH	VSG1009
S767	SWITCH	VSG1009
S768	SWITCH	VSG1009
S769	SWITCH	VSG1009
S770	SWITCH	VSG1009
S771	ROTARY ENCODER	PSX1002

CAPACITORS

C751	CHIP CAPACITOR	CKSQYF103Z50
C752	CHIP CAPACITOR	CKSQYF103Z50

OTHERS

	CABLE HOLDER(12P)	51063-1205

B DOOR MOTOR BOARD ASSY

OTHERS

	3P CABLE HOLDER	51048-0300
	4P CABLE HOLDER	51048-0400
J631	JUMPERWIRE	D20PDY0445E

C DOOR SW BOARD ASSY

OTHERS

	3P CABLE HOLDER	51048-0300
	REAF SWITCH	VSK1011
J632	3P JUMPER WIRE	D20PDD0315E

O VOLUME BOARD ASSY

RESISTORS

VR601	(22kΩ)	VCP1158

OTHERS

CN604	3P JUMPER	52147-0310
CN605	3P JUMPER	52147-0310
KN601	JUMPER TERMINAL	PKX1001

6. ADJUSTMENT

6.1 PREPARATIONS

6.1.1 Jigs and Measuring Instruments

CD TEST DISC (YEDS-7)	⊖ screwdriver (small)	⊕ screwdriver (medium)	⊖ Precise screwdriver	Low pass filter (39 kΩ + 0.001μF)
DC power supply	Dual-trace oscilloscope (10 : 1 probe)	Digital multi meter		

6.1.2 Necessary Adjustment Points

When	Adjustment points
Exchange PICKUP	① ② ③ → Page 45 - 47
Exchange MAIN BOARD ASSY	③ → Page 47
Exchange SERVO MECH ASSY	③ → Page 47
Exchange SPINDLE MOTOR	ADJ → Page 10
Remove or Exchange EXTERIOR (2/2)	④ → Page 47

6.2 ADJUSTMENT

6.2.1 How to Start/Cancel Test Mode

TEST MODE : ON

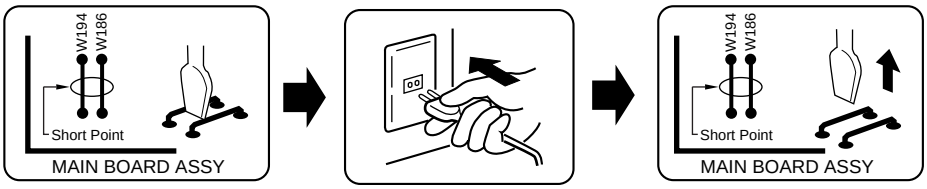

TEST MODE : PLAY

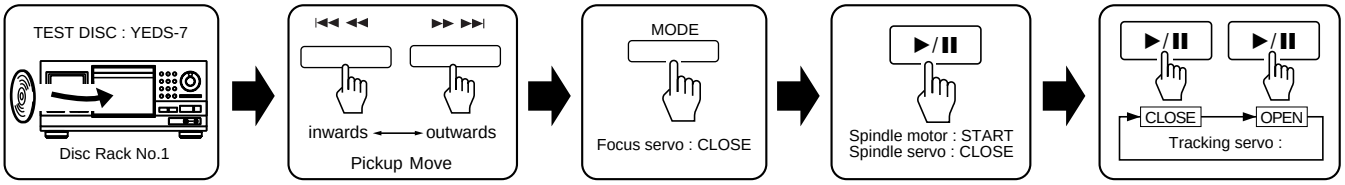

TEST MODE : STOP → CANCEL

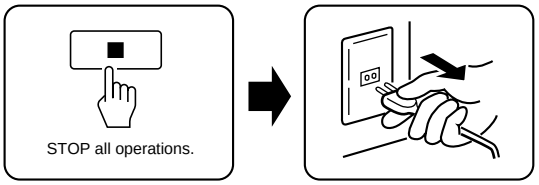

6.2.2 Adjustment Location

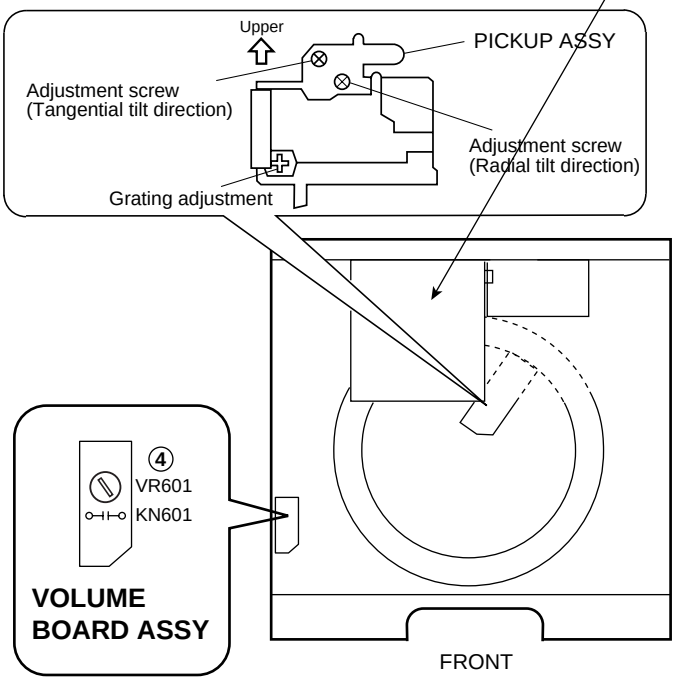

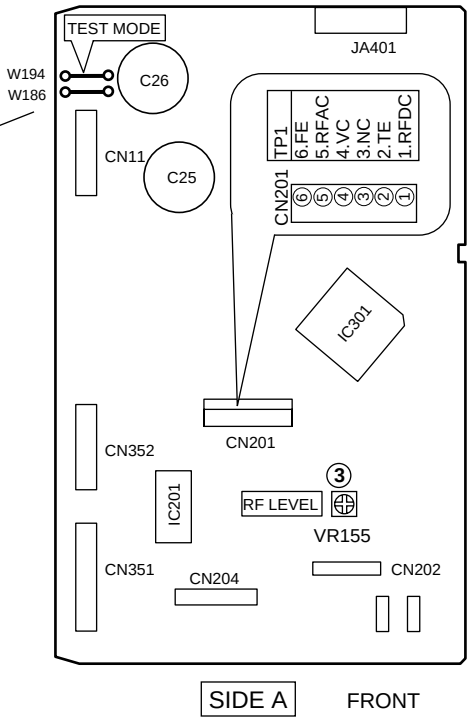

■ **Adjustment Items**

[Electrical Part]

③ RF Level Adjustment

④ Disc Detection Adjustment

6.2.3 Electrical Adjustment

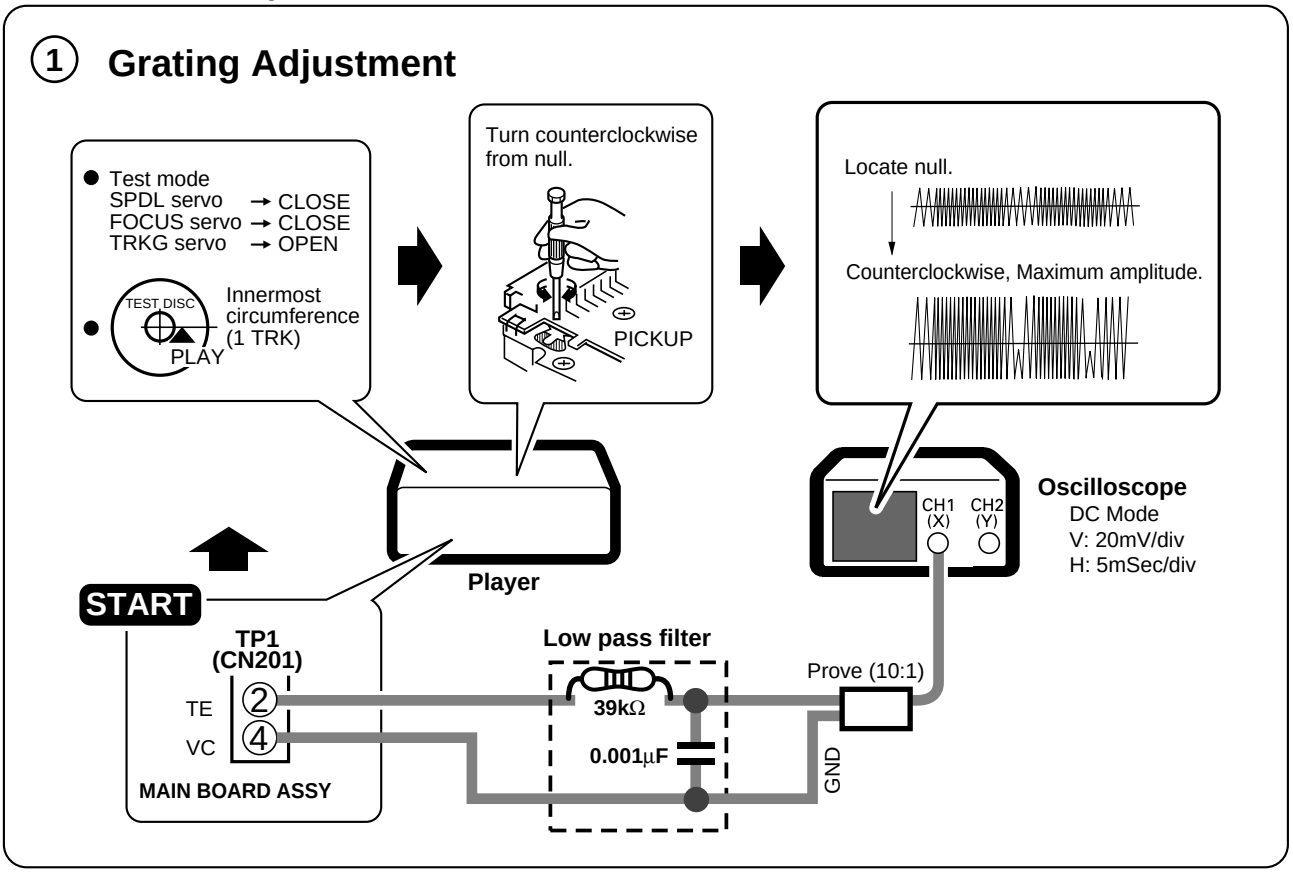

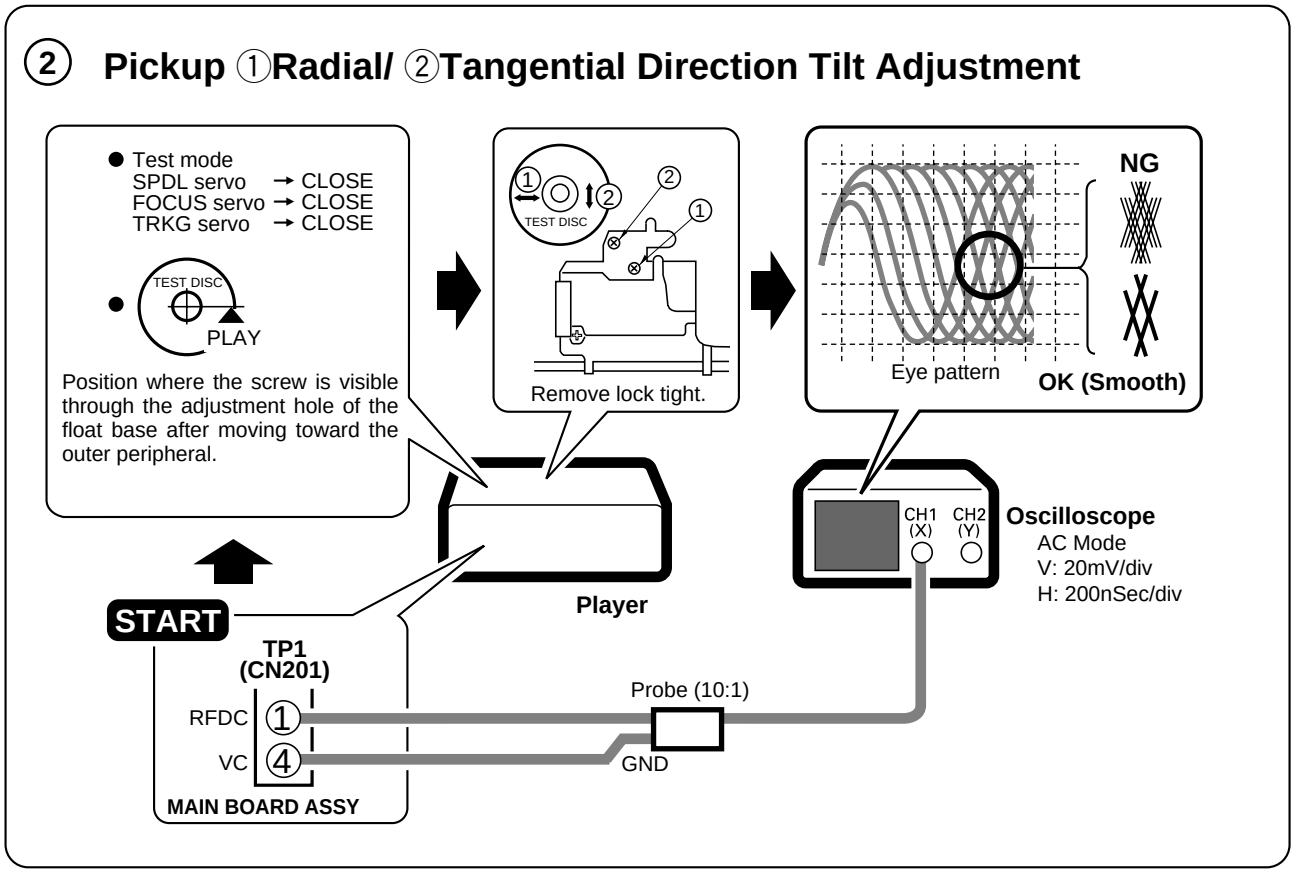

③ RF Level Adjustment

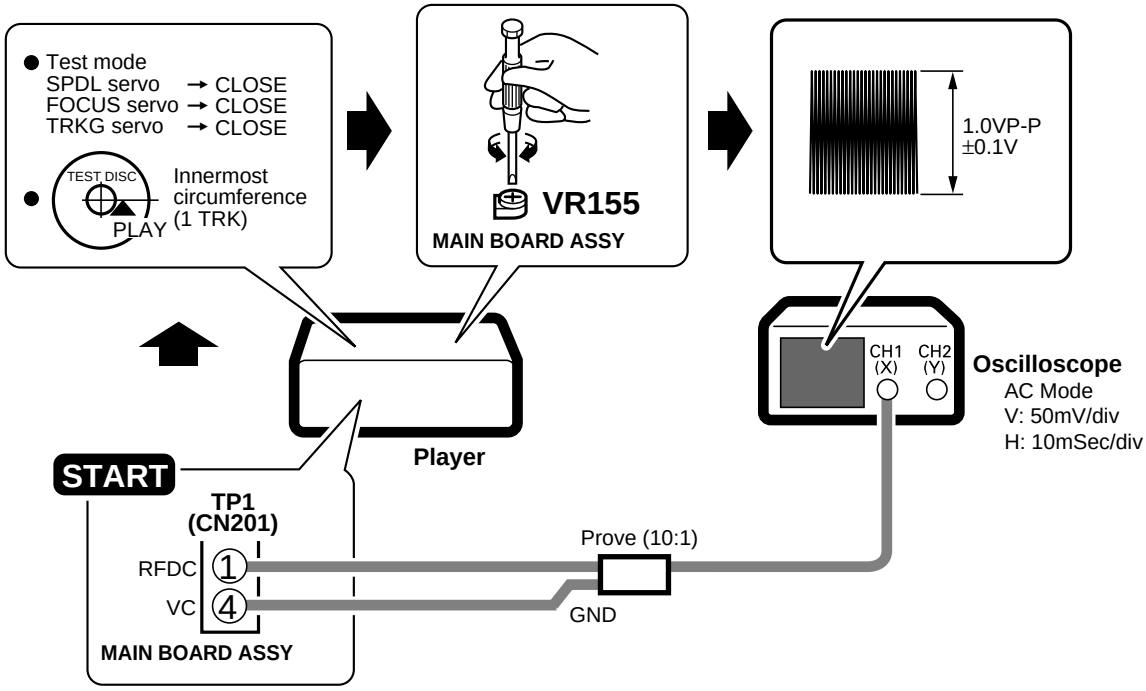

④ Disc Detection Adjustment

● **Connection Diagram for Adjustment**

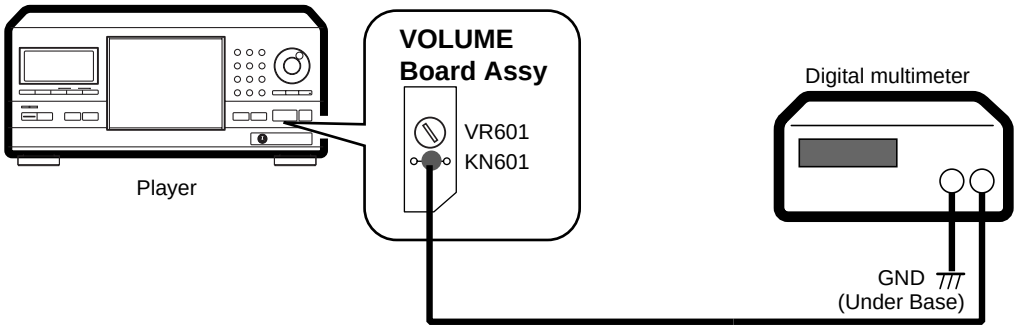

● **Adjustment Procedure**

1. Connect all equipment as shown in the diagram.
2. Turn on the power (Normal mode) and put the test disc in the No. 1 disc slot.
3. Rotate the Jog Dial to select "DISC 1".
4. Press the "ENTER" button . (Disc 1 is clamped.)
5. Adjust VR601 on the VOLUME Board Assy so that the voltage becomes 860 ± 5mV.
   (Adjust so that the free play value is 860mV ± 5mV at the low point)
6. Check the free piay vaiue at the high point.
   If it is higher than 1500mV, re-adjust low value 840mV ± 5mV.
   If it is lower than 1000mV, re-adjust low value 880mV ± 5mV.
7. Take off at the Digital Multi Meter.

7. GENERAL INFORMATION

7.1 DIAGNOSIS

7.1.1 DISASSEMBLY

■ Removal of the Servo Mechanism Assy GM

① Remove the Bonnet. (Left and right side : 2 screws, rear side : 3 screws)
② Remove the wires from the MAIN BOARD Assy. (8 places)
③ Remove the screws Ⓐ (6 screws), and remove the MAIN BOARD Assy.

Note) When the screws (3 screws) are removed in this condition, the mechanical unit can be removed as one entity. Refer to "2. EXPLODED VIEWS AND PARTS LIST".

④ Open the Hood, remove the screws Ⓑ (5 screws), disconnect the hooks of Front Panel Assy and Hood (3 places), and remove the Center Pole.
⑤ Remove the screws Ⓒ (3 screws), remove the link section Ⓓ, and remove the Arm Assy.

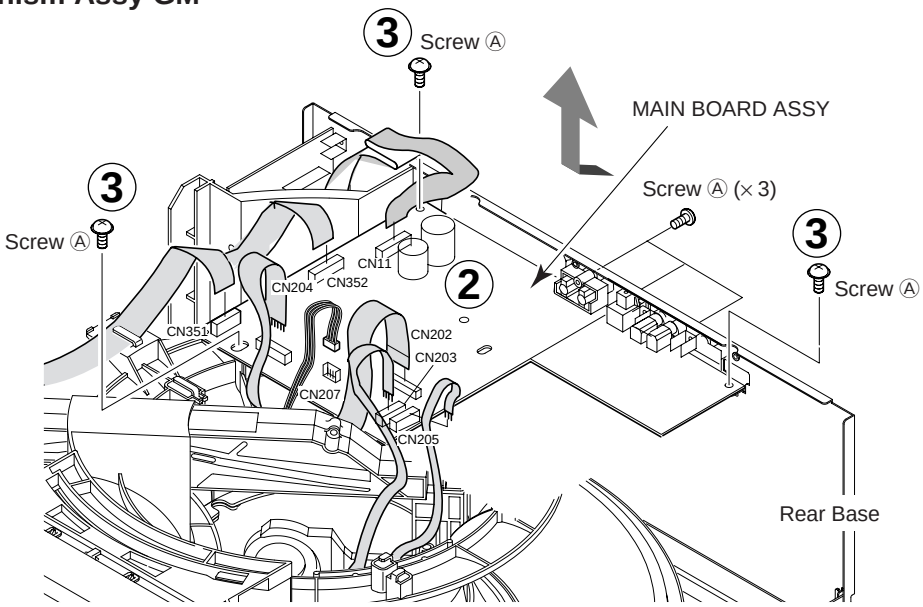

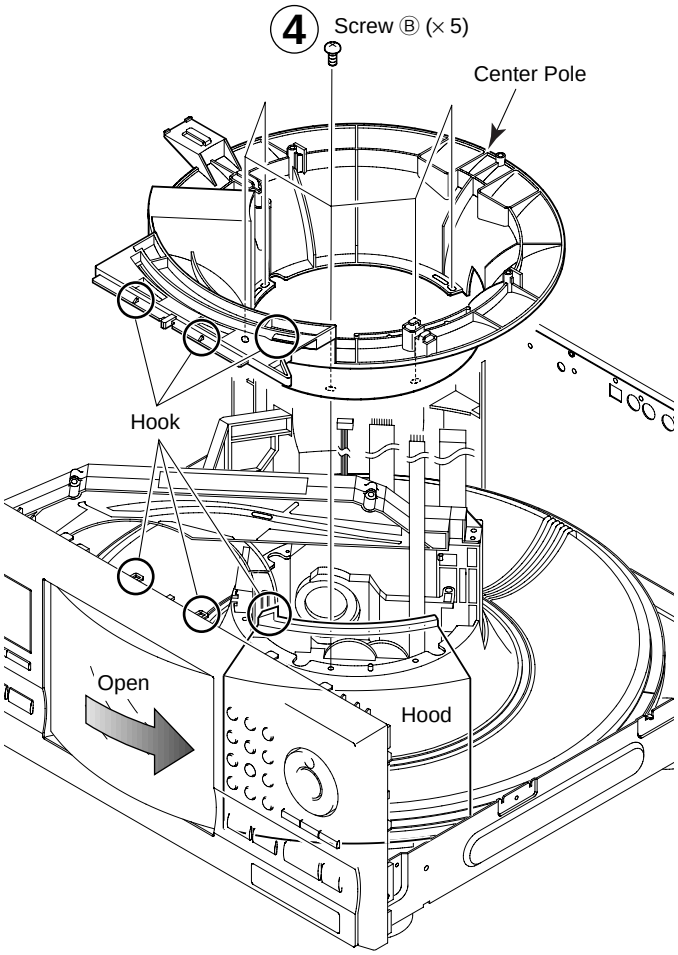

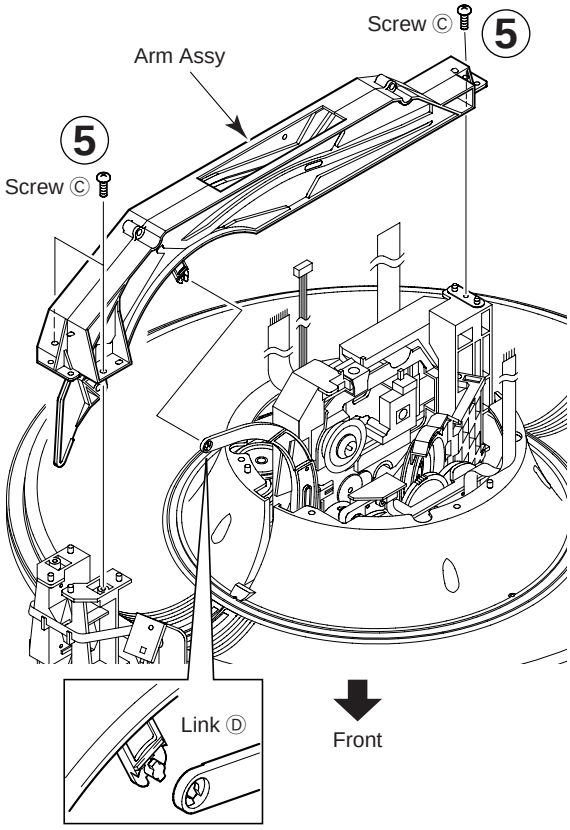

⑥ Remove the screws Ⓔ (4 screws), and then remove the Disc Guard.
⑦ Remove the Float Base Assy and Clamp Holder.

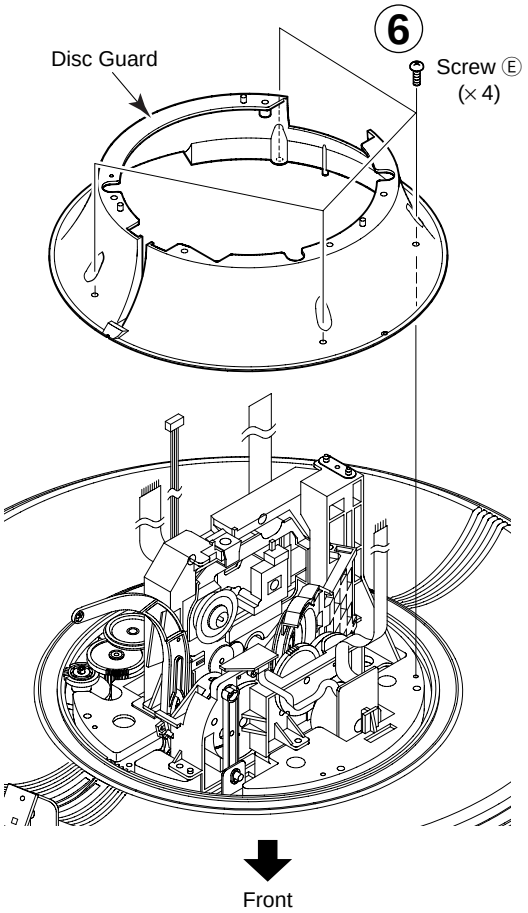

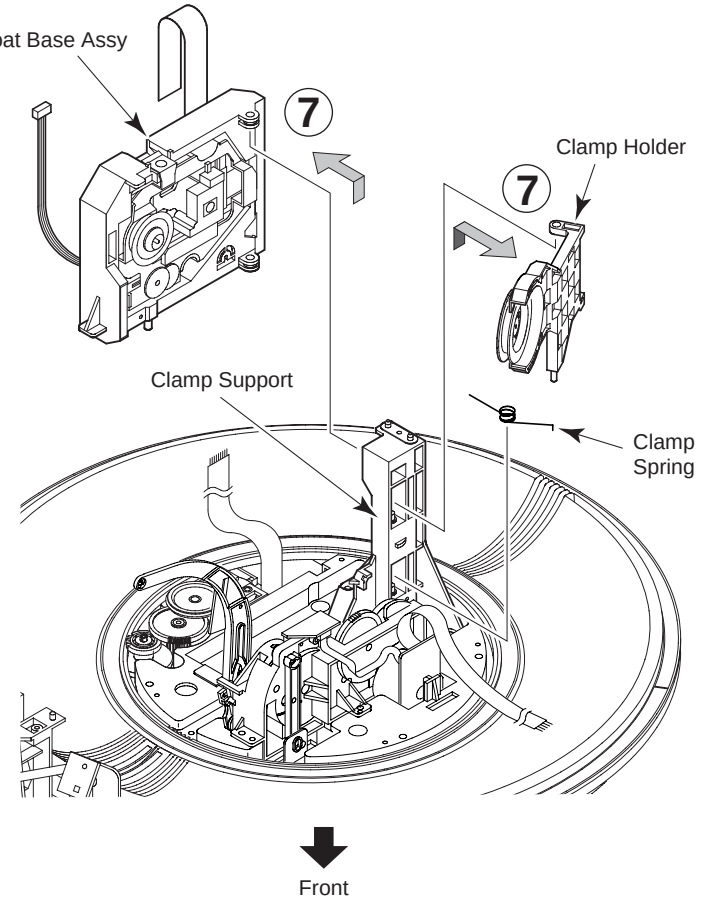

⑧ Remove the Flexible Flat Cable and the Connector Assy (4P) from the Float Base.
⑨ Remove the screw G.
⑩ Remove the float spring.
(To install this part, line up the float angle side of the Servo Mechanism ASSY GM first, and press down on the float base side.)
⑪ Remove the float rubber from the Servo Mechanism ASSY GM. At this time the Float Rubber should remain on the Float Base side. (To install it on the Float Base when it has been removed, push it into place with a thin cylindrical object.

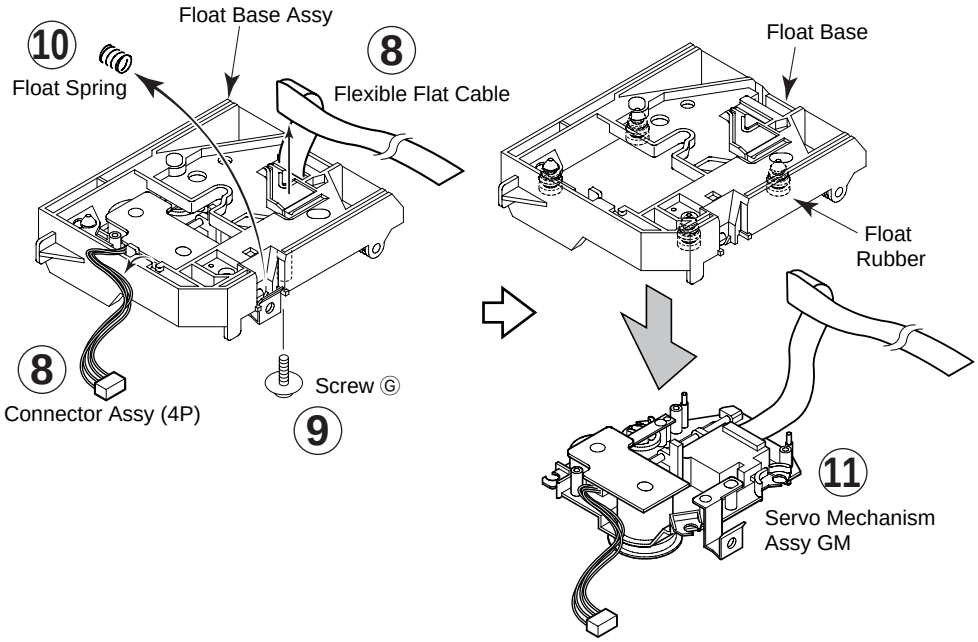

■ Removal of the Gear Holder Assy and the Disc Rack

① Perform the steps ① to ⑥ of " ■ Removal of the Servo Mechanism Assy GM ".
② Remove the screws Ⓐ (2 screws), and then remove the Gear Holder Assy.
③ Remove the Disc Rack.

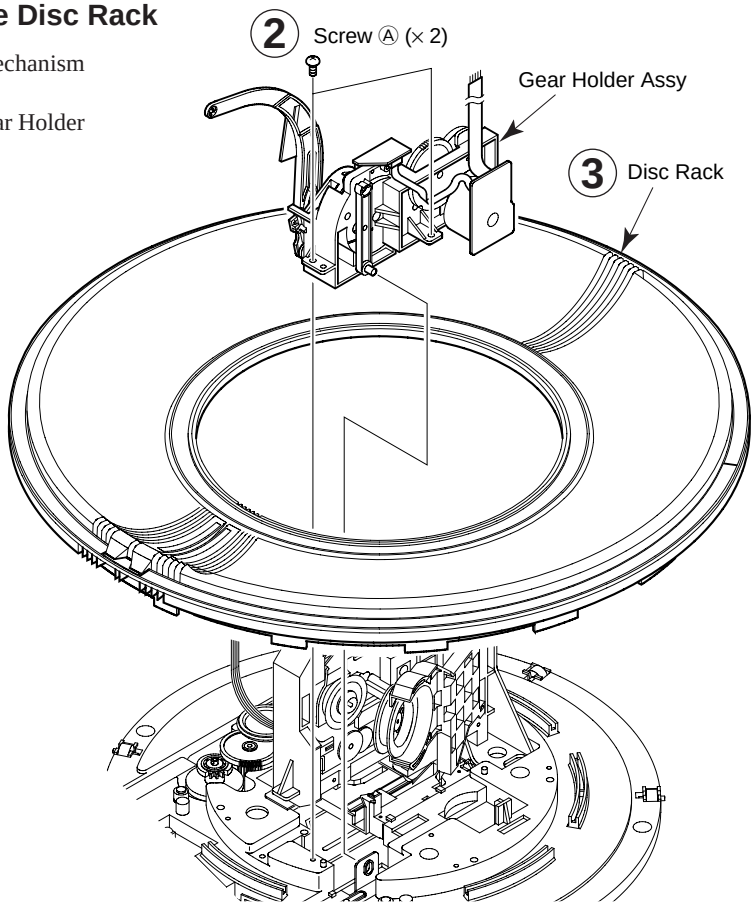

■ Removal of the Hood and Hood Base Assy

① Perform the steps ① to ⑥ of " ■ Removal of the Servo Mechanism Assy GM ". and the steps ② and ③ of " ■ Removal of the Gear Holder Assy and the Disc Rack".
② Remove the screws Ⓑ (2 screws), and then remove the Front Panel Assy.
③ Slide the Hood to the left side and remove it.
④ Remove the screws Ⓒ (2 screws) and remove the Hood Base Assy.

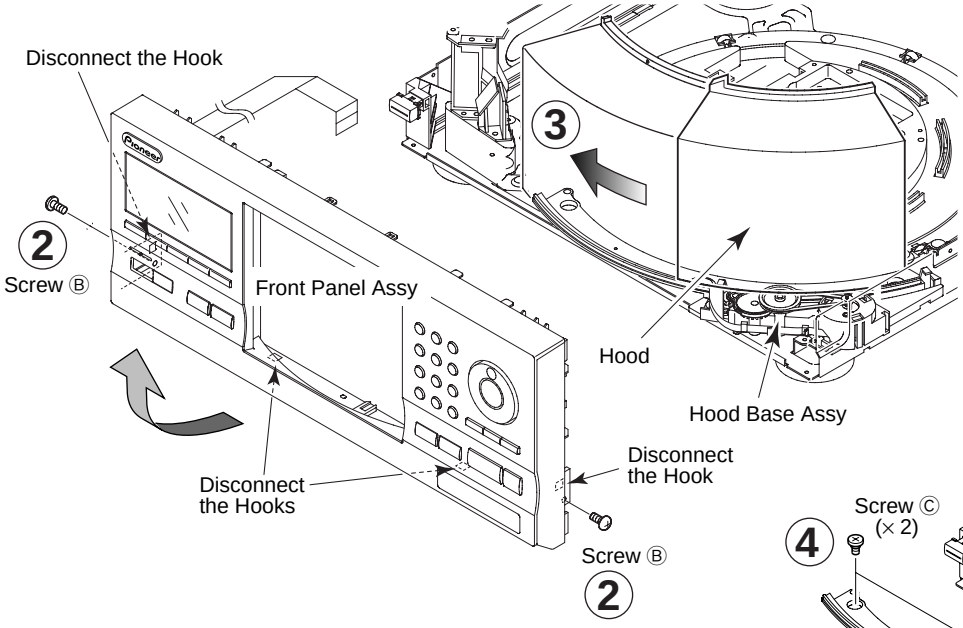

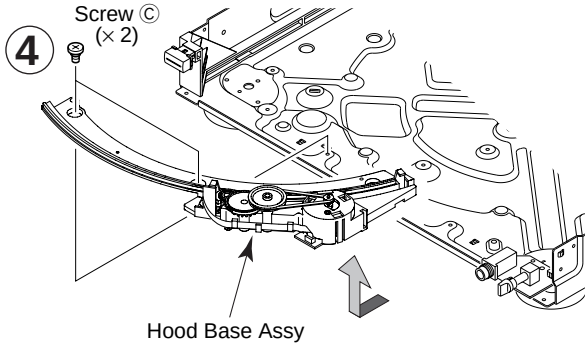

7.1.2 ERROR CHECK DISPLAY

Error check mode (display of the error history for the last 16 times) is entered when the "TIME/CHARA" button is pressed in test mode. By looking at this display, it can be seen in which status the microcomputer has stopped.

(1) Explanation of the display

Disc No. = Error code
Track No. = Error history
Min : sec = Error occurrence mode

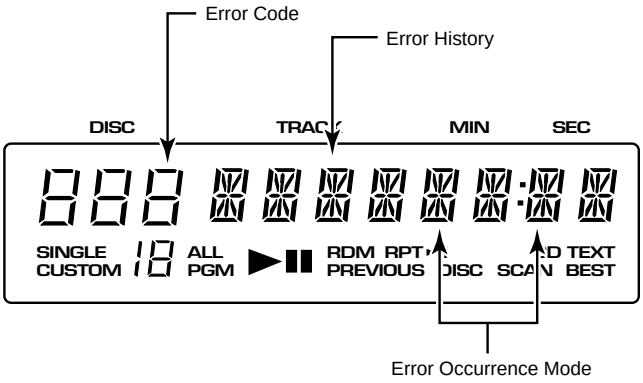

Press the "TIME/CHARA" button again to check past error codes. This switches the display. The contents of each display are as follows.

① Track No.: Error History

Display is possible from 1 to 16. The smaller numbers have occurred more recently. Accordingly, the error No. 1 is the error which has occurred most recently.

② Min : sec: Error Occurrence Mode

The internal mode at the time of occurrence of the displayed error is displayed. With Min : sec, the meaning is provided by the first digit.

Minutes digits

Display	Contents
0	During spindle stop operation
1	During disc return
2	During disc selection (during clamping operation at the time of 26)
3	During setup
4	During CDR setup operation
5	During TOC reading
6	During search operation on the disc
7	During play operation
8	During pause operation
9	During manual search

Seconds digits

Display	Contents
0	During hood closing operation and closed condition
1	During hood opening operation and open condition

③ Disc No.: Error Code Details

Note: A used display is displayed only when return to normal operation after error occurrence is not possible even when failsafe operation is performed.

<<< Rack Section >>>

User Display	Display	Contents
None	A0	• Disc playing was tried after loading, but the disc could not be detected because there was no disc, the disc was upside down, the disc was dirty, disc loading had not been completed, etc. • Focus was lost during disc playing because of disc scratches, dirt, etc.
None	A1	• At the time of track selection during play, or when trying to play, the servo mechanism could not move to the position of the intended track within a fixed time.
U1	A3	• Disc loading was tried, but loading was not possible within a fixed time. (The disc was not brought from the rack.)
	A4	• It was tried to return the disc to the rack, but the disc could not be returned within a fixed time.
U2	A2	• At the time of disc selection during play, or at the start of play from stopped condition, the selection mechanism could not move to the position of the intended disc within a fixed time.
	A5	• After initialization of the selection mechanism, after selection mechanism NG, etc., forced rack section position detection is performed for the selection mechanism, but detection was not possible within a fixed time.
None	A6	• Playing was tried after disc loading, but normal disc rotation was not possible because the disc was upside down, the disc was dirty, disc loading had not been completed, etc. • During play normal rotation was not possible because of disc scratches, dirt, etc.

<<< Rack section >>>

User Display	Display	Contents
None	A7	• When the position of the selection mechanism just before switching to disc selection operation os DCNT terminal = "L". (Normally, DCNT terminal = "H" exists when the selection mechanism is stopped, so that it can be assumed that the position of the mechanism has deviated for some reason. There is the possibility that a position deviation of the mechanism can cause a defect of the mechanism.)
None	A8	• At the time of movement of the selection mechanism, a deviation has occurred between the present position of the disc and the disc position according to position detection. (It can be assumed that the waveform at the DCNT terminal and/or at the DPOS terminal has been miscounted. When a miscount occurs, a discrepancy occurs between the displayed disc No. and the counted disc position.)
None	A9	• When the position of the mechanism became DCNT terminal = "L" during disc loading. (Normally, DCNT terminal = "H" exists when the selection mechanism is stopped, so that it can be assumed that the position of the mechanism has deviated for some reason. There is the possibility that a position deviation of the mechanism can cause a defect of the mechanism.)
None	AA	• At the time of shifting to a different disc after play completion, the pickup does not return to the innermost circumference.

<<< Hood Section >>>

User Display	Display	Contents
U3	P0	The hood did not open within a fixed time. The hood switch was broken.
	P1	The hood did not close within a fixed time. The hood switch was broken.
None	P2	It was tried to force the closed hood open. The hood switch was broken.

7.1.3 EXPLANATION OF DISC DETECTION

1. Detection of the rack position

There are two types of slits on the rear of the rack, and their combination is used to find which disc has been selected during rack rotation. The input ports (DCNT, DPOS) are as follows.

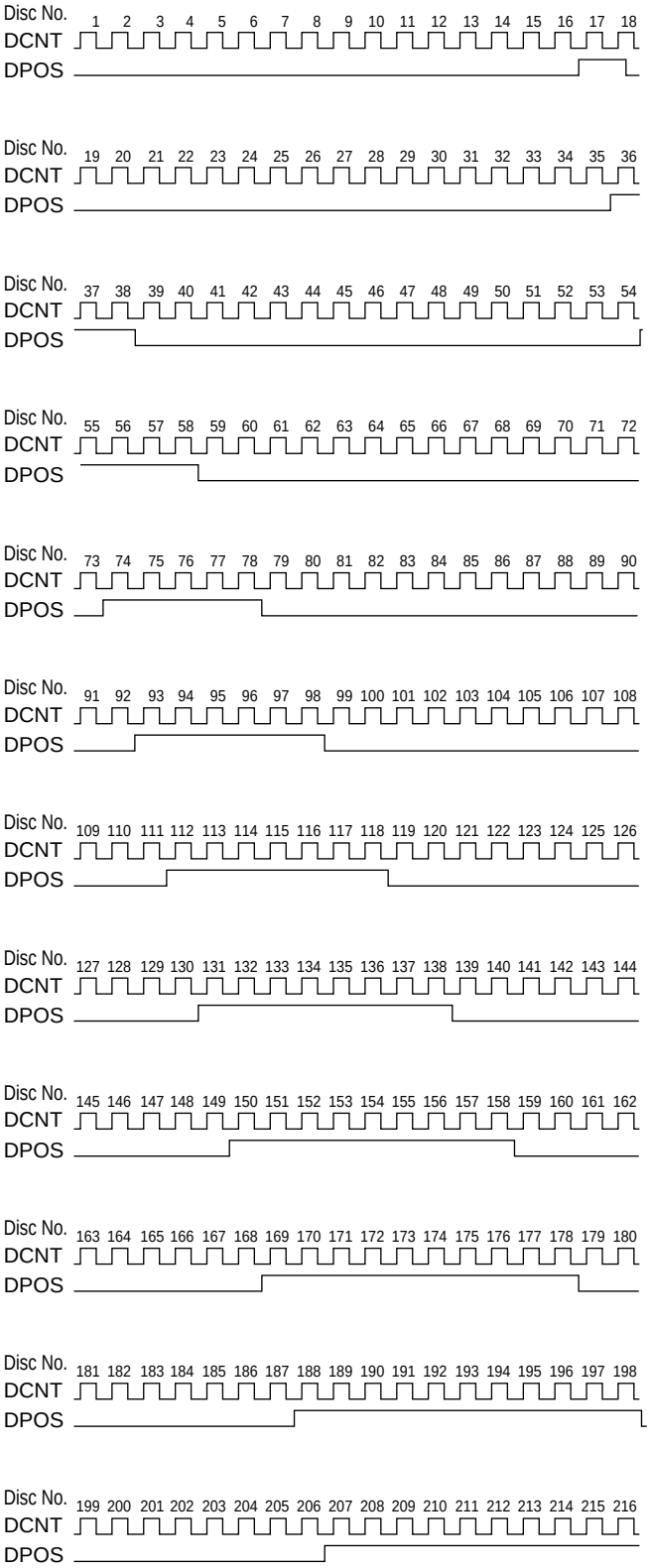

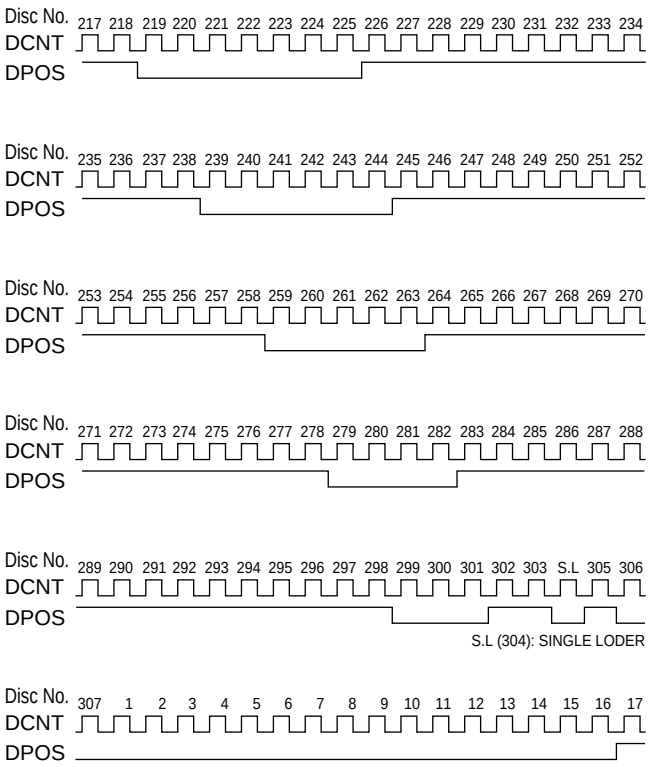

Relation between input port DCNT, DPOS and position of the mechanism

2. Position relation between position of the rack mechanism and photocell for disc detection

The relation between these two positions is as follows.

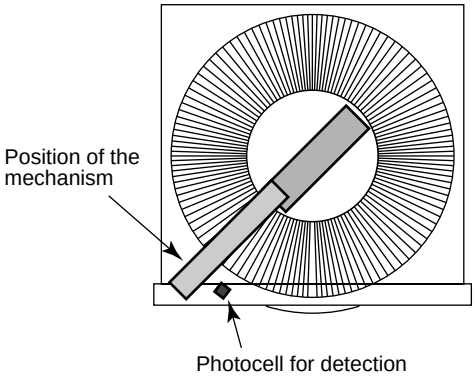

Fig.: The rack seen from above

The position of the mechanism and the photocell for detection are offset by a distance corresponding to 9 discs. Accordingly, the photocell for detection sees the disc number 9 discs before the position of the mechanism.

Example: Disc No. at the rack position : Disc No. 100
Disc No. seen by the photocell for detection : Disc No. 91

Note: The rack has 307 slits, but the slits 301 to 303 and 304 to 307 are the space for the side of the single loader and are not used. Disc detection also is not performed for them.

3. Disc Detection Method

3-1 In Regard to the Disc Detection Method

- Disc detection is performed after stabilization of the rotation speed after rack rotation start and completion of acceleration. (After start of rotation, detection starts after feed of 20 discs.)
- The input ports DCNT and DISC of the microcomputer are used for disc detection.

Port Explanation : DCNT : As described above.
DISC : Input of the disc detection result by the photocell for disc detection.
Input value "H" : No disc,
"L" : Disc present

3-2 In Regard to the Disc Detection Timing

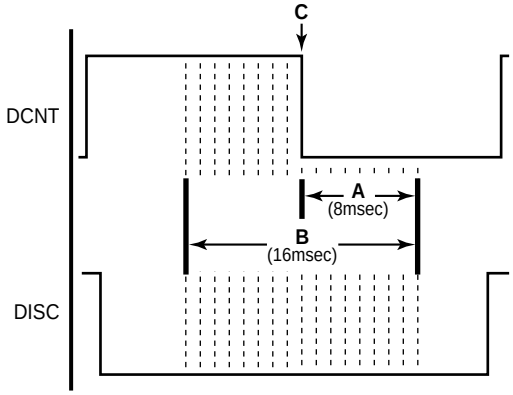

① The microcomputer looks every 1 msec at the status (H or L) of the two inputs DCNT and DISC.
② 8 msec (A in the figure) after the drop of DCNT (C in the figure), the last 17 DISC inputs (B in the figure) are checked.
A disc is assumed to be resent when even one of them is "L".
③ No disc is assumed when DISC was "H" all 17 times (B in the figure) in ②.

Note: In regard to the drop (¬L) of DCNT
For looking at the drop or rise of DCNT, it is necessary to check DCNT every 1 msec for "H" or "L".
"H" → "L" means a drop (¬L).
"L" → "H" means a rise (_F).

For the timing, either one of the following A and B can be assumed. Accordingly, the point where a drop is found differs by max. 1 msec for A and B.
Thus, using the above figure, it can be said that the time from finding that a drop has occurred until starting to check for disc presence (A in the above figure) becomes 8 to 9 msec.

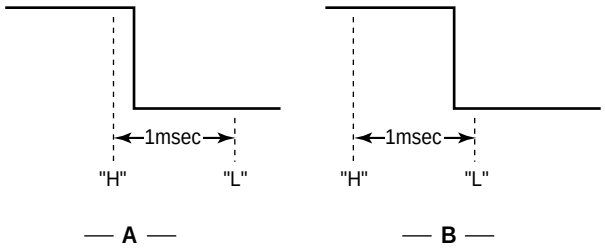

7.1.4 OPERATION FLOWCHART

● From power-on till the end of initialization

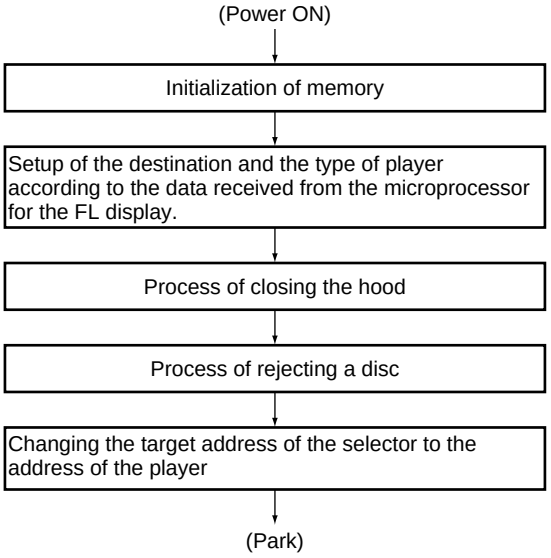

● Until start of playback of the specified disc

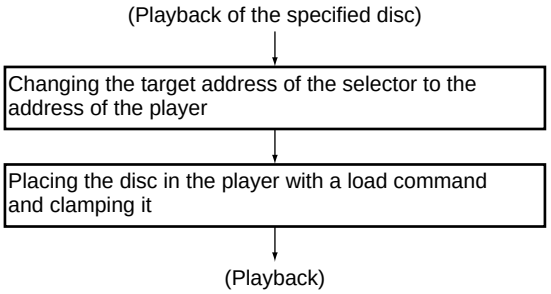

● Closing the hood

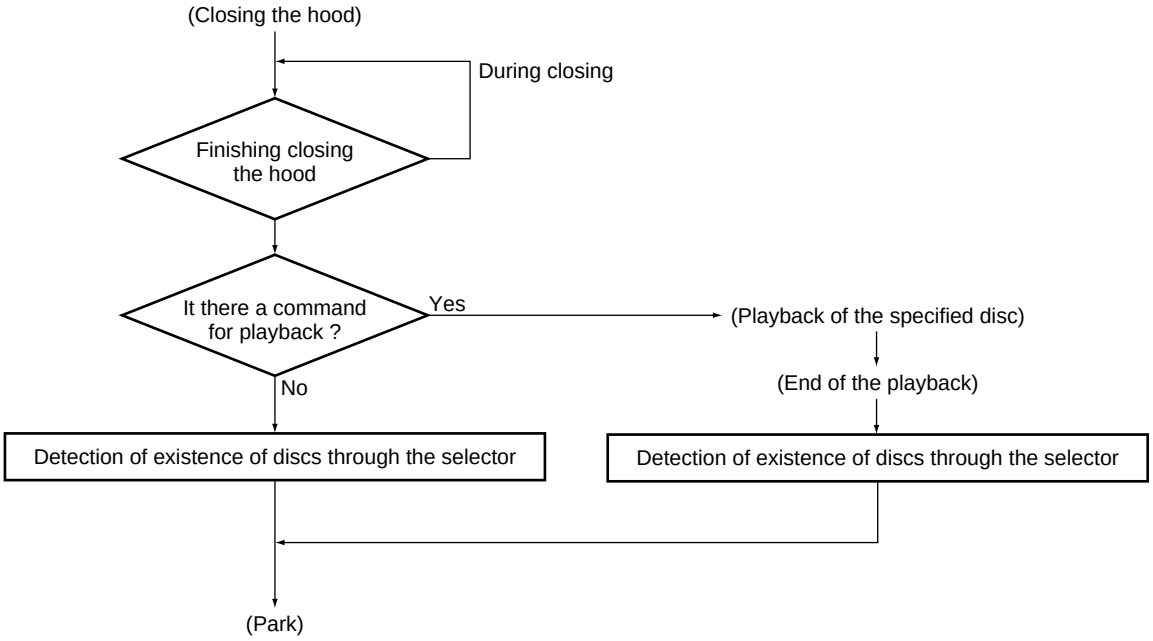

7.2 PARTS

7.2.1 IC

■ PE5132A (IC701: DISPLAY BOARD ASSY)

● System Control Micro-computer

● Pin Function

● The information shown in the list is basic information and may not correspond exactly to that shown in the schematic diagrams.

No.	Symbol	Name	I/O	Description
1	VDD	VDD	–	+5V
2	P37	ACRY	O	AC relay
3	P36/BUZ	DISC	I	Disc detection pulse input
4	P35/PCL	MUTEA	O	Audio muting output
5	P34/T12	LOUT	O	Output for loading motor IN (LIN : H, LOUT : L) OUT (LIN : L, LOUT : H) Stop (LIN : L, LOUT : L)
6	P33/T11	LIN	O	
7	P32/T02	MOPN	O	Output for hood motor Open (MOPN: H, MCLS: L) Door motor output Open CLOSE (Mopn : L, Mcls : H) Door motor output Close Stop (Mopn : L, Mcls : L)
8	P31/T01	MCLS		
9	P30/T01	XRST	O	Reset output for ech LSI
10	RESET	RESET	I	CPU reset (L: Reset)
11	X2	X2	–	Connected to System clock oscillator (4.19 MHz)
12	X1	X1	–	
13	IC	IC	–	GND
14	XT2	Not used	-	Not Connect (open)
15	P04/XT1	Not used	-	Only for input: Input of GND
16	VDD	VDD	–	+5V
17	P27/SCK0	SLOUT	O	Slave output
18	P26/SO0/SB	SYC3	O	Synchronization output
19	P25/SI0/SB0	Not used	O	Open
20	P24/BUSY	SYC1	I	Synchronization input
21	P23/STB	DLAT	O	DAC control data, latch pulse output
22	P22/SCKI	SQCK	I	Q data serial clock output (Text)
23	P21/SO1	Not used	-	Open
24	P20/SI1	SQSO	I	Q data serial input(combined use for FCOK/GFS/SENS)
25	AVSS	AVSS	–	GND
26	P17/AN17	SLCHK	I	Input for slavejudgment (L: Slave)
27	P16/AN16	MDAT	O	LSI control data serial output
28	P15/AN15	XLAT	O	LSI control data, latch pulse output
29	P14/AN14	CLOK	O	LSI control data clock output
30	P13/AN13	SENS	I	SENS Input
31	P12/AN12	SCLK	O	SENS Input clock
32	P11/AN11	Not used	-	Not used
33	P10/AN10	CDRW	O	CD/RW Gain change
34	AVDD	AVDD	-	+5V

No.	Symbol	Name	I/O	Description
35	AVREF	AVREF	–	GND
36	P03/INTP3	DCNT	I	Disc count pulse input
37	P02/INTP2	STTR	I	Keyboard communication data
38	P01/INTP1	SCORI	I	SubcodesynchronizationSO+S1 input
39	P00/INTP0/TI0	RMDT	I	Remote control data input
40	VSS	VSS	–	GND
41	P74	DPOS	I	Pulse input for disc position detection
42	P73	INSD	I	Slider INSIDE switch input(L:INSIDE)
43	P72	CLMP	I	Loading mechanism clampin switch input (L: Clamping completed)
44	P71	EJCT	I	Loading out cwitch input (L: Ejection completed)
45	P70	Not used	O	Open
46	VDD	VDD	–	+5V
47	P127/FIP52	OPENI	I	Hoodopenswitchinput(L:Opening completed)
48	P126/FIP51	CLOSE	I	Hood close switch input (L:Closeing completed)
49	P125/FIP50	JOG1	I	JOG input 1
50	P124/FIP49	JOG2	I	JOG input 2
51	P123/FIP48	DSLT	O	Selector output Count-up (DSRT:L,DSLT:H) Count-dowen (DSRT:H,DSLT:L)
52	P122/FIP47	DSRT	O	
53 | 58	P111/FIP38 | P114/FIP41	Not used	O	Open
59	P113/FIP40	PLED	O	Senser output for disc detection
60	P112/FIP39	STBL	O	STANDBY–LED
61 | 64	P111/FIP38 | P64/FIP35	Not used	O	Open
65 66 67 68 69 70	P105/FIP34 P100/FIP29	KD0 KD1 KD2 KD3 KD4 KD5	I I I I I I	Key data input
71	P97/FIP28	Not used	O	Not used
72	P96/FIP27	Not used	O	Not used
73 | 78	P95/FIP260 | P90/FIP21	ST | SM	O	Segment output for FL drive
79	VLOAD	VLOAD	–	-26V
80 | 89	P87/FIP20 | /FIP11	SK | SA	O	Segment output for FL drive
90 | 100	FIP10 | FIP0	G1 | G11	O	DIGIT output for FL drive

■ CXD2587Q (IC301: MAIN BOARD ASSY)

● Decoder

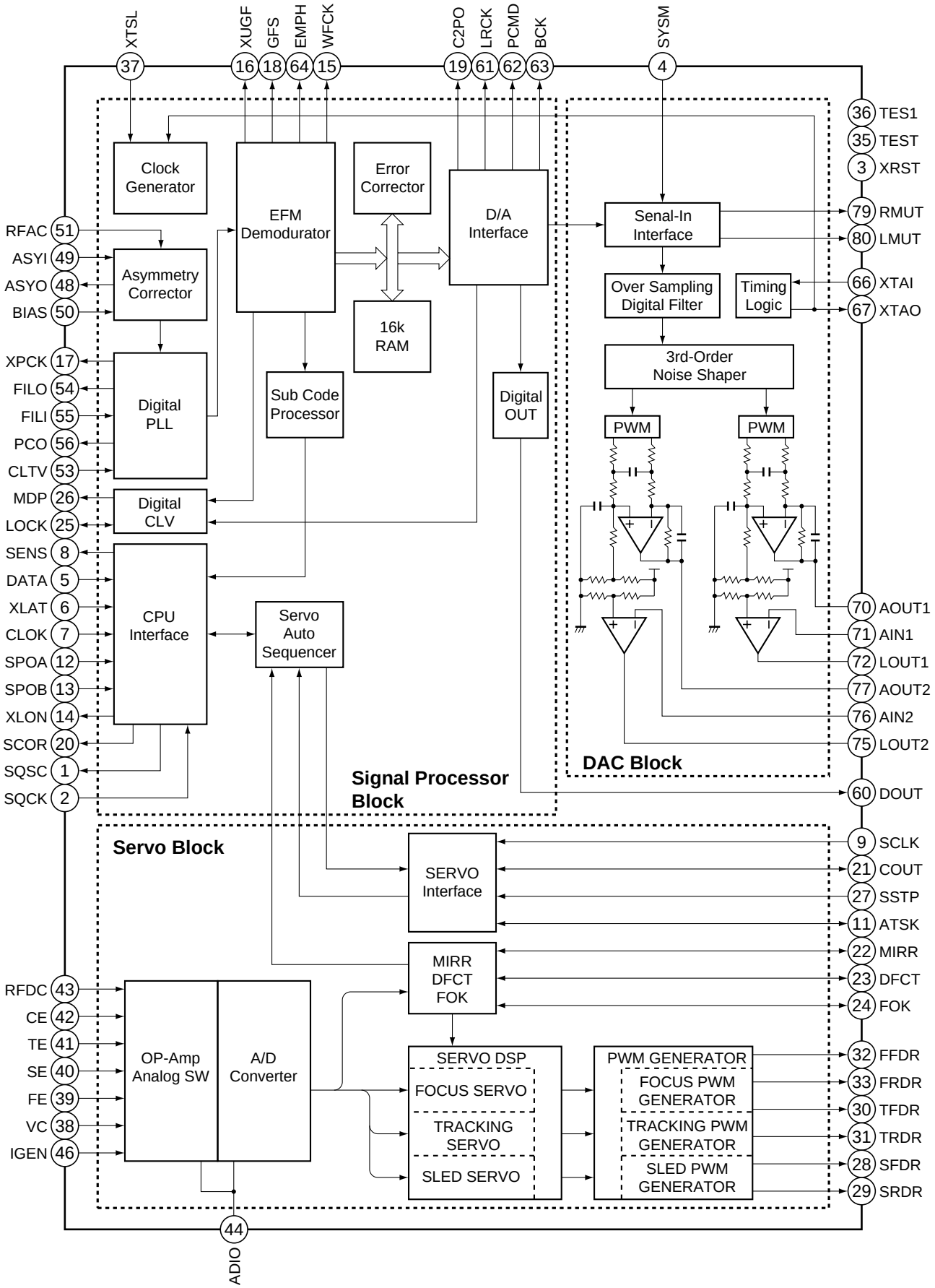

●Pin Function

¡N-o.	Pin Name	I/O	Function	No.	Pin Name	I/O	Function
1	SQSO	O	SubQ 80-bit, PCM peak and level data output CD TEXT data output	41	TE	I	Tracking error input
2	SQCK	I	Clock input for SQSO readout	42	CE	I	Center servo analog input
3	XRST	I	System reset Reset when "L"	43	RFDC	I	RF signal input
4	SYSM	I	Mute input Mute when "H"	44	ADIO	O	OP amplifier output
5	DATA	I	Serial data input from CPU	45	$AV_{SS}0$	–	Analog GND
6	XLAT	I	Latch input from CPU Serial data is latched at the falling edge.	46	IGEN	I	Constant current input for OP amplifier
7	CLOK	I	Serial data transfer clock input from CPU	47	$AV_{DD}0$	–	Analog power supply
8	SENS	O	SENS output to CPU	48	ASYO	O	EFM full-swing output ("L"=VSS, "H"=VDD)
9	SCLK	I	Clock input for SENS serial-data readout	49	ASYI	I	Asymmetry comparate voltage input
10	V_{DD}	–	Digital power supply	50	BIAS	I	Constant current input of the asymmetry circuit
11	ATSK	I/O	Input and output for unti-shock	51	RFAC	I	EFM signal input
12	SPOA	I	Microcomputer extended interface (input A)	52	$AV_{SS}3$	–	Analog GND
13	SPOB	I	Microcomputer extended interface (input B)	53	CLTV	I	VCO control voltage input for master
14	XLON	O	Microcomputer extended interface (output)	54	FILO	O	Filter output for master PLL (Slave=digital PLL)
15	WFCK	O	WFCK output	55	FILI	I	Filter input for master PLL
16	XUGF	O	XUGF output MNT1 and RFCK output by switching the command.	56	PCO	O	Charge pump output for master PLL
17	XPCK	O	XPLCK output MNT0 output by switching the command.	57	$AV_{DD}3$	–	Analog power supply
18	GFS	O	GFS output MNT3 and XRAOF output by switching the command.	58	V_{SS}	–	Digital GND
19	C2PO	O	C2PO output GTOP output by switching the command.	59	V_{DD}	–	Digital power supply
20	SCOR	O	Outputs "H" when either subcode sync. S0 or S1 is detected.	60	DOUT	O	DIGITAL OUT output
21	COUT	I/O	Input and output of track-number count signal	61	LRCK	O	D/A interface LR clock output f=Fs
22	MIRR	I/O	Mirror signal input and output	62	PCMD	O	D/A interface Serial data output (two's complement, MSB first)
23	DFCT	I/O	Defect signal input and output	63	BCK	O	D/A interface Bit clock output
24	FOK	I/O	Focus OK signal input and output	64	EMPH	O	Outputs "H" when the playback disc has emphasis, and "L" when there is no emphasis.
25	LOCK	I/O	GFS is sampled at 460Hz;when GFS is "H", this pin outputs "H". If GFS is "L" eight consecutive samples, this pin outputs "L". Input when LKIN="H".	65	XV_{DD}	–	Power supply for master clock
26	MDP	O	Servo control output of spindle motor	66	XTAI	I	Crystal oscillation circuit input Input the external master clock via this pin.
27	SSTP	I	Detection signal input of disc innermost	67	XTAO	O	Crystal oscillation circuit output
28	SFDR	O	Sled drive output	68	XV_{SS}	–	GND for master clock
29	SRDR	O		69	$AV_{DD}1$	–	Analog power supply
30	TFDR	O	Tracking drive output	70	AOUT1	O	L ch analog output
31	TRDR	O		71	AIN1	I	L ch OP amp. input
32	FFDR	O	Focus drive output	72	LOUT1	O	L ch LINE output
33	FRDR	O		73	$AV_{SS}1$	–	Analog GND
34	V_{SS}	–	Digital GND	74	$AV_{SS}2$	–	Analog GND
35	TEST	I	TEST pin : normally GND	75	LOUT2	O	R ch LINE output
36	TEST	I		76	AIN2	I	R ch OP amp. input
37	XTSL	I	Crystal selector input "L":16.9344MHz , "H":33.8688MHz	77	AOUT2	O	R ch analog output
38	VC	I	Center voltage input	78	$AV_{DD}2$	–	Analog power supply
39	FE	I	Focus error signal input	79	RMUT	O	R ch zero detection flag
40	SE	I	Sled error signal input	80	LMUT	O	L ch zero detection flag

Notes)
- PCMD is an MSB first. two's complement output.
- GTOP is used to monitor the frame sync protection status. (High:sync protection window released)
- XUGF is the negative pulse for the frame sync derived from the EFM signal. It is the signal before sync protection.
- XPCK is the inverse of the EFM PLL clock. The PLL is designed so that the falling edge of XPLCK and the EFM signal transition point coincide.
- GFS goes high when the frame sync and the insertion protection timing match.
- RFCK is derived with the crystal accuracy. This signal has a cycle of 136µs.
- C2PO represents the data error status.
- XROF is generated when the 16K RAM exceeds the ±4F jitter margin.

7.2.2 DISPLAY

■ PEL1098 (V701: DISPLAY BOARD ASSY)

● Vacuum Fluorescent Display

● Pin Assignment

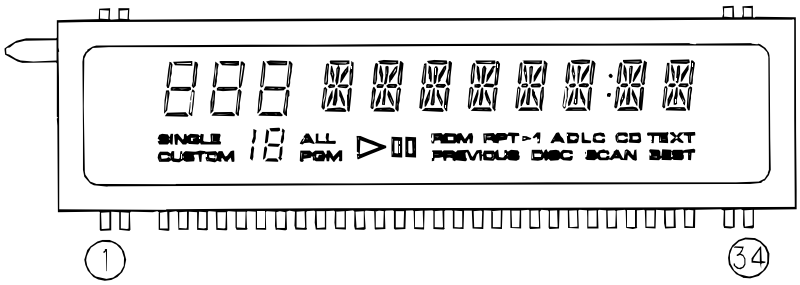

● Grid Assignment

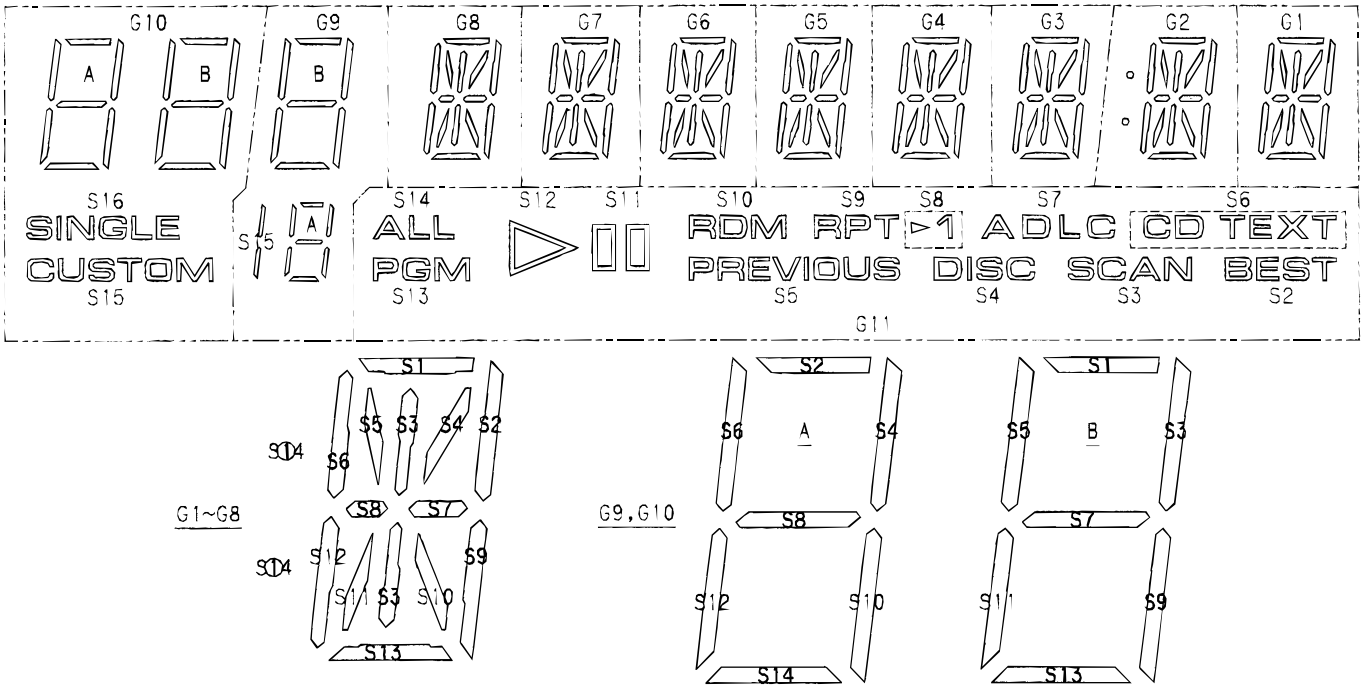

● Pin Connection

PIN ASSIGNMENT

Pin No.	1	2	3	4	5	6	7	8	9	10	11	12	13	14	15	16	17
Assignment	F1	F1	NP	G11	G10	G9	G8	G7	G6	G5	G4	G3	G2	G1	NL	S16	S15

Pin No.	18	19	20	21	22	23	24	25	26	27	28	29	30	31	32	33	34
Assignment	S14	S13	S12	S11	S10	S9	S8	S7	S6	S5	S4	S3	S2	S1	NP	F2	F2

F1,F2:Filament G1~G11:Grid S1~S16:Anode NP:No Pin NL:No Lead

8. PANEL FACILITIES AND SPECIFICATIONS

■ PANEL FACILITIES

FRONT PANEL

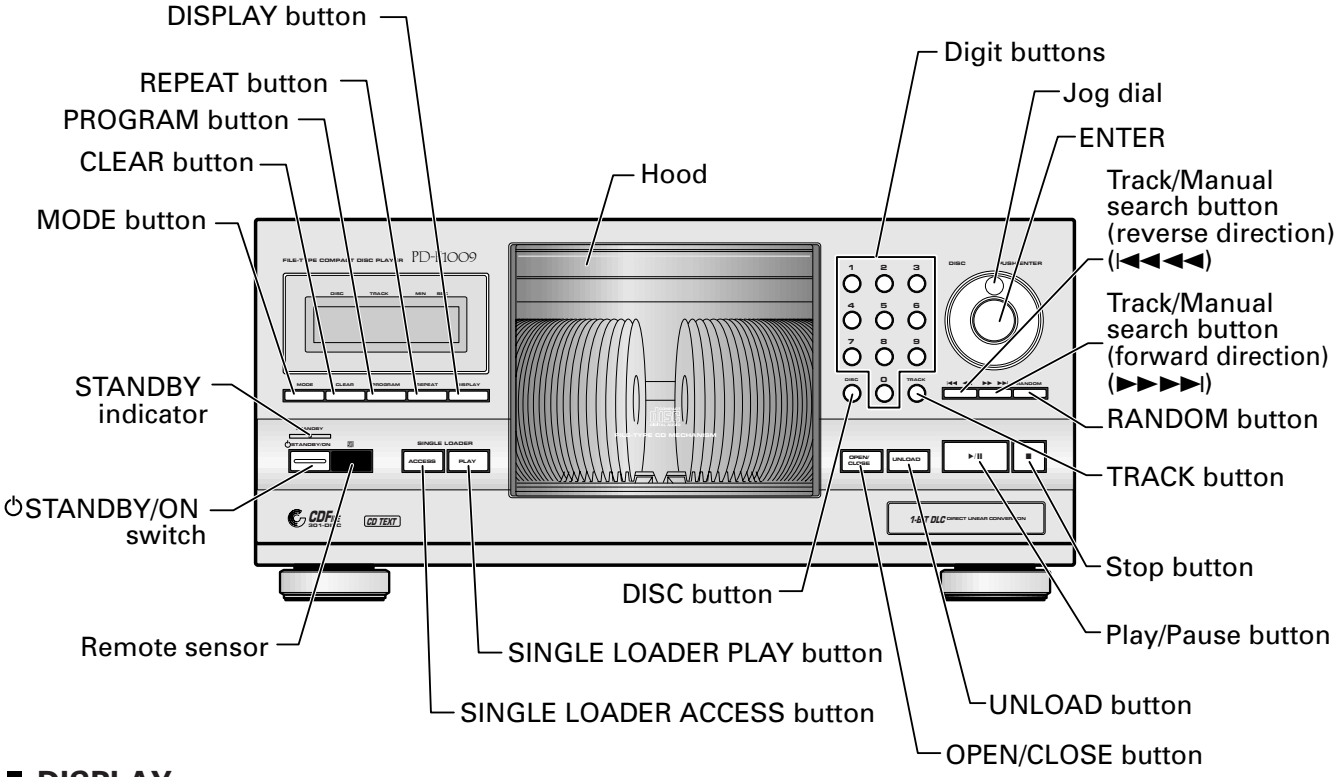

DISPLAY

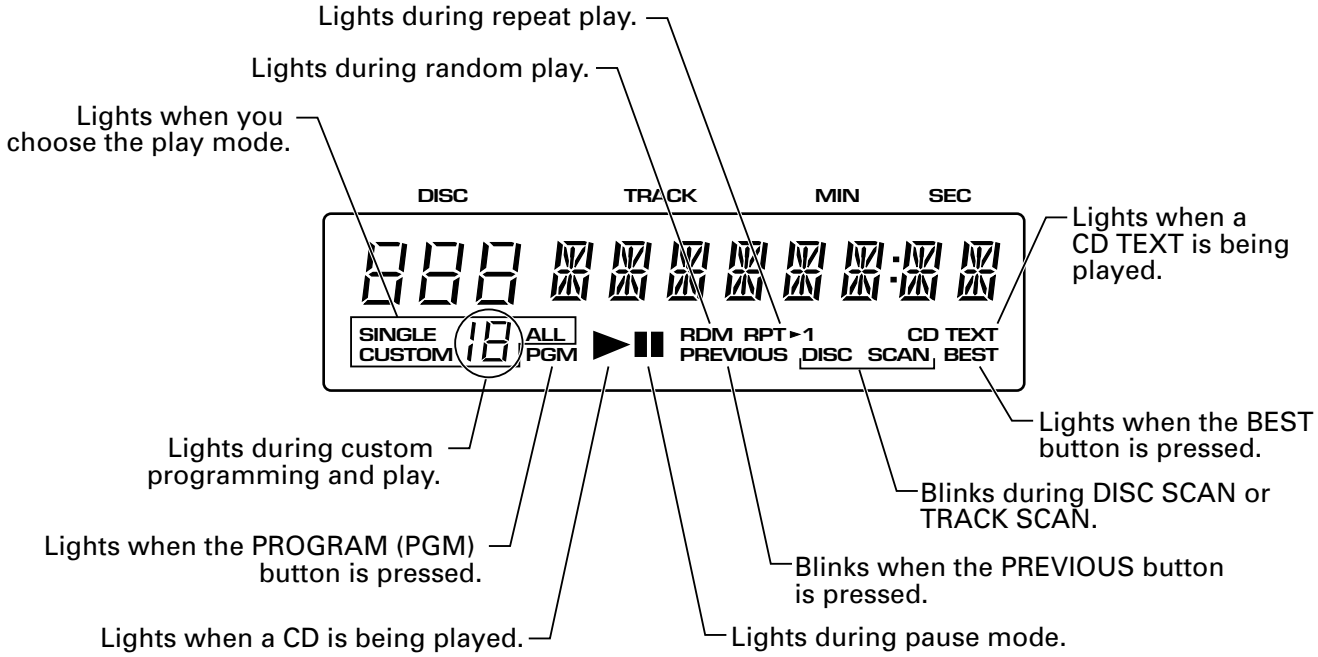

■ SPECIFICATIONS

1. General

Type ..... Compact disc digital audio system
Power requirements (KU/CA Model) ..... AC 120V, 60 Hz
Power requirements (MY Model) ..... AC 220V-230V, 50/60 Hz
Power consumption ..... 12 W
Power consumption in standby mode ..... 1 W
Operating temperature ..... +5°C – +35°C
(+41°F – +95°F)
Weight (without package) ..... 7.5 kg (16 lb 9 oz.)
External dimensions ..... 420(W) X 433(D) X 193(H) mm
(16-9/16(W) X 17-1/16(D) X 7-5/8(H) in.)

2. Audio section

Frequency response ..... 2 Hz - 20 kHz
S/N ratio (KU/CA Model) ..... 98 dB or more (EIAJ)
S/N ratio (MY Model) ..... 105 dB or more (EIAJ)
Dynamic range (KU/CA Model) ..... 96 dB or more (EIAJ)
Dynamic range (MY Model) ..... 98 dB or more (EIAJ)
Harmonic distortion (KU/CA Model) ..... 0.003 % or less (EIAJ)
Harmonic distortion (MY Model) ..... 0.002 % or less (EIAJ)
Level difference between channels ..... 1.0 dB or less (EIAJ)
Output voltage ..... 2 Vrms (EIAJ)

Channels ..... 2-channel (stereo)

3. Input/Output terminal

Audio line output
Control input jack
Control output jack (KU/CA Model)
Optical digital output jack

4. Accessories

- Remote control unit 1
- Size AA/R6P dry cell batteries 2
- Audio cable 1
- Control cable (KU/CA Model) 1
- Warranty card 1
- Operating instructions 1

Note!!
Specifications and design subject to possible modification without notice, due to improvements.

Accessories

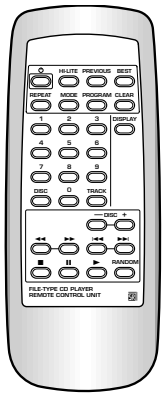

Remote control unit x 1
(PWW1168)

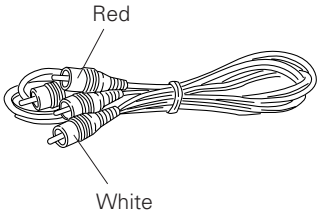

Audio cable x 1
(PDE1248) (L=1 m)

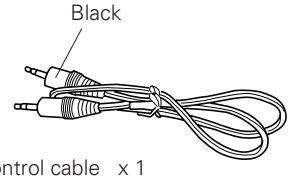

Control cable x 1
(PDE1247) (L=1 m)

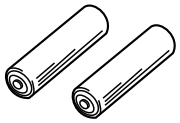

Size AA/R6P dry cell batteries x 2

Other included items
- Warranty card
- Operating Instructions